Wright Hennepin Electric Service Connection Guide

July 17, 2015

TABLE OF CONTENTS

INTRODUCTION **1**

ENGINEERING STATEMENT **1**

1. DEFINITIONS **2**

2. GENERAL INFORMATION **8**

2.1. EFFECTIVE DATE 8
2.2. INTENT 8
2.3. APPLICATION FOR SERVICE 9
2.4. RATE SCHEDULES 9
2.5. SERVICE AND LIMITATIONS 10
2.6. CONNECTION 10
2.7. CUSTOMER-OWNED METER EQUIPMENT RESTRICTIONS 10
2.8. DIVERSION OF ELECTRICITY 10
2.9. EASEMENTS FOR COOPERATIVE'S FACILITIES 11
2.10. CUSTOMER'S RESPONSIBILITY 11
2.11. CUSTOMER-OWNED FACILITIES 11
2.12. SAFETY 12
2.13. WRIGHT-HENNEPIN LIMITED TELEPHONE DIRECTORY 14

3. CHARACTER OF SERVICE AVAILABLE **15**

3.1. TYPES OF SERVICE 15
3.2. METER SOCKETS FOR TYPES OF SERVICE 15
3.3. DISTRIBUTION (PRIMARY) SERVICE 16
3.4. TRANSMISSION SERVICE 16

4. SERVICE FACILITIES **17**

4.1. SERVICES 17
4.2. OVERHEAD SERVICE 18
4.3. UNDERGROUND SERVICE 21
4.4. SERVICE LATERAL SIZES (FOR BALANCED LOAD): 23
4.5. CONDUIT SIZING CHART: 23
4.6. TRANSFORMER INSTALLATIONS - NETWORK VAULTS 24
4.7. TRANSFORMER INSTALLATIONS - PAD-MOUNTED 25
4.8. POINT OF DELIVERY 26
4.9. CUSTOMER-OWNED SERVICE CONDUCTORS 26
4.10. METERING 27
4.11. TEMPORARY SERVICE 33
4.12. PRIMARY METER INSTALLATIONS 34
4.13. METER SOCKETS 34
4.14. METER LOCATION AND INSTALLATION 37
4.15. METER MOUNTING HEIGHTS 39
4.16. METER CLEARANCES 40
4.17. COLD SEQUENCE METERING 40
4.18. HOT SEQUENCE METERING 41

5. TRANSFORMERS 42

5.1. GROUNDING 42
5.2. SPECIAL RULES 42
5.3. FAULT CURRENT 42
5.4. ARC FLASH 43

SPECIFICATION OR GUIDE DRAWING

Cable Service Assembly Guide	K4.1G
Mast Type Service Assembly Guide	K4.2G
Temporary Service Installation From an Overhead Secondary Supply	K4.3G
Meter Ice and Snow Shield	K4.4G
Service Drop Clearance Requirements	K4.5G
Net Metering Guide	Q2.3G
Primary Metering Installation (Three Phase)	Q4.2
Single Phase 120/240 Volt Service, 1-CT - 3 Wire, Off Peak Only	3S-1
Three Phase 120/240 Volt Service, 4 Wire Delta	16S-3
Typical Arrangements for Switchgear Installation	Figure M1
Current Transformer Mounting Requirements for Cabinets and Switchgear	Figure M2
Wall-Mounted Current Transformer Enclosures	Figure M3
Three Phase Transformer Concrete Pad Guideline	UM1-6C
Three Phase Pad-Mounted Transformer Secondary Connection Cabinet Concrete Pad - In- Line Orientation	UM1-8C
Three Phase Pad-Mounted Transformer Secondary Connection Cabinet Concrete Pad - 90 Degree Orientation	UM1-9C
Three Phase Transformer Guide	UM1-G1
Three Phase Transformer Guide	UM1-G2
Pad-Mount Transformer Clearance Guide	UM1-G3A
Pad-Mount Transformer Clearance Guide	UM1-G3B
Pad-Mount Transformer Clearance Guide	UM1-G3C
Pad-Mount Transformer Clearance Guide	UM1-G3D
Primary Meter Cabinet Clearance Requirements	UM1-G4
Meter Installation Underground Source Guide	UM8
Temporary Service Installation From an Underground Secondary Supply	UM8-G1
Trough Type Meter Pedestal Guide	UM8-3,3A
Trenches for Direct Buriel Cable	UR2-NT
Clearance Requirements From Gas Meter	UM1-G5

INTRODUCTION

The core focus of Wright-Hennepin (also referred to as "WH", or "the Cooperative") is to provide you with competitive electric rates, reliable and safe power, and outstanding customer service. Our vision is to be the preferred energy services Cooperative in our marketplace. Our mission is to deliver the power, products and competitive pricing our Members desire.

Wright-Hennepin follows National Electric Safety Code, National Electric Code and the Rural Utilities Service regulations as guidelines for its installation standards. Wright-Hennepin's ultimate authority is contained in its bylaws and policies as approved by its Board of Directors.

WH's Service Connection Guide will help to determine the necessary requirements for customers' wiring intended to be connected to the Cooperative's distribution system. This publication will help you work more efficiently and aid in getting a utility connection established with minimum inconvenience. It also provides for the safety and reliability of our customers and safe working conditions for our personnel.

This publication has been prepared to assist you in planning your electrical installation and to serve all its customers in an orderly manner and expedite service connections.

New, rewired, altered, or repaired wiring installations intended for connection to WH's distribution system shall comply with the rules of the Cooperative, the *National Electrical Code*®, and any other codes or regulations in effect in the area served. WH does not assume the function of inspecting customers' wiring for adequacy, safety, or compliance with the electrical codes. Such responsibility remains with the customer and inspectors.

Questions concerning large and/or complicated electrical projects should be directed to WH ***in advance of construction and/or purchase of equipment*** @ 763-477-3000 or filed online at www.whe.org/for-my-home/service-requests.html. This will reduce the risk of project delays or expensive changes during construction.

Due to constant progress in the development of materials and processes, WH reserves the right to revise this publication from time to time. Users of this book would like to forward suggestions to improve this document may submit them via email to info@whe.org.

Portions of this publication are available at: http://www.whe.org.

ENGINEERING STATEMENT

This publication was created to be consistent with industry practices utilizing resource material from both WH and other utility documents made publicly available and adjusted to meet WH standards. The objective is to provide an electric service installation standard for WH customers, contractors and employees to construct to. It has been reviewed for compliance with the National Electric Safety Code, National Electric Code and the Rural Utilities Service regulations as affirmed by Heartland Engineering Services review and approved by WH management.

Reviewed (Date): 7/17/15

Engineer:

Approved:

SECTION 1

1. DEFINITIONS

Note: The following definitions are furnished for the appropriate interpretation of this document and are not necessarily universally accepted definitions.

1.1. ACCESS POINT
The point defined by the intersection of the customer's property line and the Cooperative-owned conductors crossing it, which serves that customer. When a customer is to be served from a distribution line in an easement on the customer's property, the access point is the pole for overhead (OH), the switch cabinet bay for primary underground (UG), or the splice box or pedestal for secondary underground (UG) from which the Cooperative-owned conductors will be fed.

1.2. AGENT
One who is authorized to act for another under a contract or relation of agency, for the Cooperative or the customer.

1.3. ALTERED
Replacing major components or any integral part of a meter socket, current transformer cabinet, riser, mast, line or load side conductor, relocating electric service equipment, (including storm damage).

1.4. AMR - AUTOMATED METER READING
An automated method of reading electric registers (indexes).

1.5. APPLICANT
The property owner, lessee, sub-lessee, their agent and/or contractor applying for electric service from the Cooperative.

1.6. BUS DUCT
A preassembled unitized device containing secondary electrical bus.

1.7. CAPTIVE FASTENER
A fastener that is loosely held in place and cannot separate from fastened object. Usually manufactured from metal with various designs.

1.8. CLASSIFICATION OF METERING
Commercial and Industrial (See definition for COMMERCIAL AND INDUSTRIAL METERING).
Residential (See definition for RESIDENTIAL METERING).

1.9. COLD SEQUENCE METERING
The utilization of a disconnect device between the electric meter and the supply source. Refer to Section 4, COLD SEQUENCE METERING.

1.10. COMMERCIAL AND INDUSTRIAL METERING
Metering of any service used for the operation of a business, whether or not for profit, shall be considered as a commercial or industrial enterprise. Includes metering of all services other than residential.

1.11. COOPERATIVE
Wright-Hennepin Cooperative Electric Association (WH)

1.12. COOPERATIVE PROPERTY
All lines, wires, apparatus, instruments, meters, load management equipment, transformers, and materials supplied by the Cooperative at its expense or under its standard policies.

1.13. COOPERATIVE REPRESENTATIVE
The Cooperative employee authorized to perform specific tasks.

1.14. CONDUIT
Standard tubular material used for mechanical protection of electrical systems which may be exposed, buried beneath the surface of the ground, or encased in a building structure as required. (See definition for DUCT).
NOTE: For the purpose of this publication, the terms Conduit and Duct are used interchangeably.

1.15. CONSTRUCTION TRAILER
A structure built on a permanent chassis designed to be transportable which is intended for installation on a site without permanent foundation.

1.16. CONTRACTOR
Any person, Cooperative or corporation acting under contractual agreements for either the Cooperative or for the customer.

1.17. CURRENT TRANSFORMER (CT)
An instrument transformer designed for the measurement or control of current.

1.18. CUSTOMER
The applicant or user of electric service in whose name the service with the Cooperative is listed.

1.19. DEAD-END EQUIPMENT
Various devices used to terminate service conductors.

1.20. DIVERSION OF ELECTRICITY
Unauthorized connection to the Cooperative's electric facilities where electric service is being used and not metered (e.g. when the electric meter has been bypassed from the Cooperative).

1.21. DUCT

Standard tubular material used for mechanical protection of electrical systems which may be exposed, buried beneath the surface of the ground, or encased in a building structure as required. (See definition for CONDUIT).
NOTE: For the purpose of this publication, the terms Conduit and Duct are used interchangeably.

1.22. EMT
Electric Metallic Tubing (*National Electrical Code®*).

1.23. EXCESS FACILITIES
In those instances where the Cooperative provides distribution or metering facilities at the customer's request, in excess of the facilities necessary to supply service to the customer, the customer shall be required to contract to pay the Cooperative for such facilities and to pay the Cooperative annually an amount to cover the cost of insurance, replacement (or cost of removal), licenses, fees, taxes, operation, maintenance, and appropriate allocable administrative and general expenses of such excess distribution facilities.

1.24. GAIN
Cutting a flat spot into a pole or attaching a metal device to a pole which has a flat surface on one side.

1.25. GRC
Galvanized Rigid Conduit (*National Electrical Code®*).

1.26. HIGH-LEG, WILD LEG, POWER LEG
The phase having the higher phase voltage to ground on a 4-wire delta-connected service, where the midpoint of one phase winding is grounded.

1.27. HOT SEQUENCE METERING
The electric meter is connected directly to the service conductors without the use of a fault-current limiting disconnect or meter safety-switch device between the electric meter and the supply source.

1.28. ICE AND SNOW SHIELD, METER
A protective device used to prevent falling ice or snow from damaging the electric meter.

1.29. IMC
Intermediate Metallic Conduit (*National Electrical Code®*).

1.30. INSPECTOR
The electrical inspector of the Public Authority.

1.31. INSTRUMENT TRANSFORMER
A transformer that reproduces in its secondary circuit, the voltage or current proportional to its primary circuit.

1.32. JOINT USE AGREEMENT
A contractual agreement made between the Cooperative and a third party allowing the use of Cooperative property or facilities.

1.33. MANUFACTURED HOME
A structure which is transportable and intended for installation on a permanent foundation meeting the definition of a Manufactured Home as defined in 2014 *National Electrical Code®* Article 550.2, or as may be amended.

1.34. MEANS OF ATTACHMENT
Fittings used to attach service-drop conductors.

1.35. METER/METERING EQUIPMENT
The equipment necessary to measure the customer's electric energy use and demand including meter socket, instrument transformers, protective device and meter.

1.36. MOBILE HOME
A structure built on a permanent chassis designed to be transportable and intended for installation on a site without permanent foundation.

1.37. MULTIPLE METER CENTER
A pre-assembled multiple metering unit or fabricated meter center using meter sockets where two or more customers are metered at a common location.

1.38. NEC® - NATIONAL ELECTRICAL CODE®[1]
A publication of the National Fire Protection Association, Inc.

1.39. NESC®- NATIONAL ELECTRICAL SAFETY CODE®[2]
A publication of the Institute of Electrical and Electronic Engineers, Inc. as adopted by ANSI.

1.40. NOMINAL VOLTAGE
Designation of the value of the normal effective difference in potential between any two appropriate conductors of the circuit.

1.41. NON-STANDARD DESIGN
Construction not conforming to the Cooperative's standard method of design because of the customer's request. The customer may be charged for the additional cost incurred by the Cooperative.

1.42. NRTL
Nationally Recognized Testing Laboratory

1.43. POINT OF ATTACHMENT
The point at which the service-drop conductors are attached to a building or other structure.

---

[1] *National Electrical Code®* and *NEC®* are registered trademarks of the National Fire Protection Association, Inc., Quincy, MA 02269
[2] *National Electrical Safety Code® and NESC®* are registered trademarks and service marks of the Institute of Electrical and Electronics Engineers, Inc., New York, NY 10017

1.44. POINT OF DELIVERY
Point where the Cooperative's electric facilities are first connected to the electric facilities of the customer.

1.45. PRIMARY METERING
Metering of service voltages above 480V nominal.

1.46. PUBLIC AUTHORITY
The municipal, county, or state authorities having inspectors and jurisdiction to inspect electrical installations.

1.47. PVC
Polyvinyl Chloride (*National Electrical Code*®).

1.48. RACEWAY
Any channel for holding bus bars, cables, or wires, which is designed for this purpose.

1.49. RESIDENTIAL METERING
Metering of services used for the exclusive use of the individual customer for domestic purposes.

1.50. READILY ACCESSIBLE
An area that can be readily and safely accessed through a doorway, ramp, or stairway by a person on foot who neither exerts extraordinary physical effort nor employs special tools or devices to gain entry is considered readily accessible. .

1.51. REPAIRED
Service equipment in need of any repair such as damaged meter socket, riser, mast (including storm damage).

1.52. REWIRED
Upgrading of any existing service equipment including secondary conductors within meter sockets, CT enclosures, cold sequence disconnects, and Primary Metering Installations.

1.53. POLICIES AND BYLAWS
The rules, regulations and conditions of service as approved by the Board of Directors.

1.54. SECONDARY CONDUCTORS
That part of the Cooperative's distribution system, which connects the secondaries of the Cooperative's distribution transformers to the service drop or service lateral.

1.55. SECONDARY CONNECTION CABINET
Cabinet required when the number and/or size of conductors exceeds the Cooperative's limit for terminating in a specified pad-mounted transformer.

1.56. SERVICE
The furnishing of electric energy for the exclusive use of the individual customer.

1.57. SERVICE DROP
The overhead service conductors from the last distribution pole or other aerial distribution support to and including the splices connecting to the service-entrance conductors at the building or other structure.

1.58. SERVICE-ENTRANCE CONDUCTORS, OVERHEAD SYSTEM
The service conductors between the terminals of the customer's service equipment and the point of connection to the service drop conductors.

1.59. SERVICE-ENTRANCE CONDUCTORS, UNDERGROUND SYSTEM
The service conductors between the terminals of the customer's service equipment and the point of connection to the service lateral.

1.60. SERVICE EQUIPMENT
Necessary equipment, usually consisting of a circuit breaker or fusible disconnect switch and their accessories, located near the point of entrance of the supply conductors to a building and intended to constitute the main control and means of cutoff for the supply to that building.

1.61. SERVICE LATERAL
The underground service conductors between the Cooperative secondary distribution system and/or transformer terminals and the connection to the service-entrance conductors in a terminal box or meter socket located outside the building wall. Where the meter is located in the building and no terminal box exists outside the building, the point of connection shall be considered the point of entrance of the service conductors into the building.

1.62. SERVICE MAST
The service mast is the conduit containing the service-entrance conductors where the point of attachment and the connection between the service drop and the service-entrance conductors is located **above** the roofline. The conduit extends to a point, and the weather head is located, above the roof eave. The conduit passes through the eave of the building or extends past the roofline without passing through the eave. The means of attachment is attached to the service mast.

1.63. SERVICE RISER
The service riser is the conduit containing the service-entrance conductors where the point of attachment and the connection between the service drop and the service-entrance conductors is located on a pole or **below** the roofline of the building being served. The conduit extends to a point, and the weather head is located, below the roof eave. The means of attachment is secured to the pole or building and is not attached to the service riser.

1.64. VOLTAGE TRANSFORMER (VT)
An instrument transformer intended for use in the measurement or control of a circuit and designed to have its primary winding connected in parallel with the circuit.

1.65. VOLTAGE UNBALANCE
Maximum voltage deviation from average voltage.

SECTION 2

2. GENERAL INFORMATION

Service furnished by WH is subject to WH's Standard for Electric Installation and Use, the *National Electrical Code®* and the *National Electrical Safety Code®. WH is also subject to guidelines as established by RUS (Rural Utilities Service) and the policies and bylaws of the Cooperative.*

WH assumes no responsibility for the manufacturer's, supplier's, electrician's or engineering consultant's compliance with all applicable *NEC®* and *NESC®* codes as well as all local and state codes.

Any waiver at any time of the WH's rights or privileges under the Policies and Bylaws will not be deemed a waiver as to any breach or other matter subsequently occurring.

The following are brief statements of those operating rules and practices, which affect the majority of connections made to the Cooperative's lines. Where information not included herein is needed, a WH Representative will provide assistance.

2.1. EFFECTIVE DATE

WH's Standard for Electric Installation and Use may be used at any time on or after the publication date. Contact the Cooperative or visit on-line at www.whe.org to view or receive a copy of the most up-to-date edition.

2.2. INTENT

The word "shall" indicates provisions that are mandatory.

The word "should" indicates provisions that are normally and generally practical for the specified conditions.

The word "may" indicates possibility.

The words "recommend" and "recommended" indicate provisions considered desirable, but not intended to be mandatory.

Exceptions to a rule have the same force and effect required or allowed by the rule to which the exception applies. All requests for exceptions shall be submitted in writing and will be responded to in writing. Verbal exceptions will not be granted.

Requirements of the *National Electrical Code®*, *National Electric Safety Code®*, or the Public Authority which are more stringent than the requirements of this document will take precedence.

2.3. APPLICATION FOR SERVICE

The customer may contact WH at 763-477-3000 to secure information relative to any application for new electric service connections or changes in existing service. Service telephone numbers for WH can be found at the end of this Section.

Before an electric service connection can be made to the customer's (applicant's) wiring system, it is necessary that:

1. The customer has made application for service.

2. The applicant has met all requirements of WH's Rules and Line Extension Policy in effect and in effect.

3. WH has completed its construction.

4. The Public Authority has notified WH of approval of the installation by providing an inspection release.

Where no Public Authority has jurisdiction, Wright-Hennepin, for the customer's protection, may require written confirmation from the wiring electrician that the customer's installation conforms to the *National Electrical Code*®.

The Cooperative does not assume responsibility for the design, operation or condition of the customer's installation.

The Cooperative may make service available from either overhead or underground facilities. In cases where there are aesthetic considerations or where complicated overhead physical situations exist, the Cooperative may recommend the installation of underground facilities.

The Cooperative will not install facilities to serve a customer until the customer agrees to take the service under the applicable Rate Schedule and all applicable charges for construction and service, as required by the Cooperative's Extension Policy, are paid to the Cooperative. Additional costs incurred for digging in frost conditions when insufficient time was provided to estimate, plan, schedule and construct the necessary facilities prior to the onset of frost conditions will be paid by the customer as a nonrefundable charge.

The Cooperative shall not under any circumstances be required to make an extension, which would be unprofitable and thereby cause undue hardship upon other members of WH.

It is extremely important that the Cooperative be consulted in advance of the finalization of the customer's plans regarding the Cooperative's electric service requirements.

2.4. RATE SCHEDULES

Electric service is supplied to customers under the Cooperative's established rates, rules, and bylaws as approved by the Board of Directors. Rate information for residential, commercial, and industrial customers are available from the Cooperative upon request.
Cooperative Representatives will assist the customer in understanding the Cooperative's rates and in applying them to the customer's load conditions.

2.5. SERVICE AND LIMITATIONS

Service will be rendered to the customer from the Cooperative's nearest suitable power line of sufficient capacity to furnish adequate service at the service voltage available. Service shall not be used by the customer for purposes other than those specified in the applicable Rate Schedule.

2.6. CONNECTION

Connection to or disconnection from the Cooperative's distribution system shall be made by the Cooperative. Under no circumstances will the customer be permitted to climb the Cooperative's poles, access the Cooperative's underground facilities, or make connections to the Cooperative's lines, except as specified in Section 2.13.4 Unlock, Open and/or De-energize any Electric Power Equipment Procedures.

The Cooperative shall be notified when it is necessary to cut the meter seal due to situations where the electric service must be disconnected during an emergency or where it necessary to access the meter socket by a qualified person. No persons, other than employees or agents of the Cooperative, may relocate meters or other equipment owned by the Cooperative.

2.7. CUSTOMER-OWNED METER EQUIPMENT RESTRICTIONS

Under no circumstances shall customers' equipment:

1) Be connected to, or in any way be served from, the secondary terminals of the voltage and/or current metering transformers.

2) Be installed within any metering enclosures including, but not limited to, metering transformer cabinets, transformer compartments, meter sockets or cold sequence disconnect.

3) Be connected to an unmetered bus or conductor.

4) Plug in devices such as surge suppression, generator transfer switch or any equipment designed to fit between the meter and the socket is not allowed.

5) Foreign attachments such as but not limited to CATV, phone loops, grounding clamps and load monitoring equipment, etc., are not permitted to be attached or connected to meter/metering equipment, service riser or service mast.

6) Customer-owned transformers shall not be installed ahead of any Cooperative metering, except as permitted.

2.8. DIVERSION OF ELECTRICITY

Under no circumstances shall devices or attachments be connected to the Cooperative's facilities in such a manner as to permit the use of unmetered energy except in emergencies where specifically authorized by the Cooperative. Refer to Section 4.10.2 Existing Services.

2.9. EASEMENTS FOR COOPERATIVE'S FACILITIES

The customer shall provide, at the request of and at no cost to the Cooperative, necessary easements and suitable land area or building space owned and controlled by the customer for installation, construction, reconstruction, maintenance, operation, control and use of the Cooperative's overhead and/or underground facilities used or useful to render service to the customer.

2.10. CUSTOMER'S RESPONSIBILITY

The customer shall give authorized employees of the Cooperative access at all reasonable times to the premises of the customer in order to obtain information concerning connected load, to measure or test service, to read meters, or for other purposes incidental to the supplying of electric service. Failure to comply may result in disconnection of services.

It is the responsibility of the customer to adequately protect the Cooperative's equipment located on the customer's property against damage. The customer shall be responsible for any damages or loss resulting from improper protection or neglect.

Pad-mounted transformers, switchgear, and metering equipment shall be installed with adequate clearances for normal maintenance work as specified in Section 5 and the Illustrations Section.

Underground distribution facilities will not be installed until the property is to final grade (±6 inches), the property pins are installed, and the structure is staked or foundation is installed as applicable. Grade at pad-mounted equipment shall be to exact final grade. Whenever it is deemed necessary by the Cooperative, the customer shall provide Cooperative-approved conduit. This will be required in locations that are not readily accessible by the Cooperative such as under driveways, roads, parking lots, sidewalks, patios, etc.

Customers shall connect their equipment so that the load at the point of delivery will be balanced as nearly as practicable. Where three-phase service (except 3-phase, 4-wire delta) is supplied, the customer will attempt to connect equipment so that the load in any one phase at the point of delivery will not exceed the load in any other phase by more than ten (10) percent. Refer to Section 6.1, THREE-PHASE VOLTAGE UNBALANCE.

2.11. CUSTOMER-OWNED FACILITIES

Distribution facilities, either overhead or underground, beyond the Cooperative's point of delivery are to be installed, maintained, and operated by the customer under all the following conditions:

1) Each installation is subject to the provisions of the Cooperative's Policies and Bylaws, the applicable Rate Schedule, and the approval of the Cooperative.

2) Under rates providing for delivery at secondary voltages, the Cooperative will install and maintain only a single transformer installation for the customer, except as specified in Section 4.1 SERVICES.

3) The Cooperative will not install or permit the installation of customer-owned equipment on Cooperative poles including but not limited to: meter sockets, metering equipment, distribution wires, posters, banners, placards, radio or television aerials or dishes, or other objects or devices.

   Exception: Wires for municipal fire alarm systems, police signal systems, customer's underground service extensions to the overhead system, customer's dead-end equipment, or

equipment covered by Joint Use Agreement.

Note: Meter sockets and other metering equipment shall not be installed on Cooperative poles with the exception of temporary metering equipment needed during construction if prior approval is given from Cooperative specific to the job.

4) The customer's distribution system shall be in conformance with the *National Electrical Code®,* the wiring regulations of the Public Authority, and the Cooperative's Policies and Bylaws.

5) The distribution facilities of the customer beyond the point of delivery shall be connected to the Cooperative's distribution system at one central point through protective devices, approved by the Cooperative, installed and maintained at the expense of the customer.

6) Customers shall maintain their distribution system in a safe operating condition so that it does not constitute a hazard to themselves, utility personnel or to other customers or persons. The Cooperative assumes no responsibility for inspection of the customer's lines and facilities and shall not be liable for injury to persons or damage to property when occurring on or caused by the customer's lines or equipment.

7) Distribution facilities beyond the point of delivery shall be installed, owned, operated, and maintained by the customer. Such facilities shall be located on and traverse only land owned or controlled by the customer. The customer's distribution facilities shall be installed in compliance with the *National Electrical Code®*, the *National Electrical Safety Code®*, the wiring regulations of the public body having jurisdiction, and the Cooperative's Policies and Bylaws.

8) Refer to Section 4 for additional requirements for customer-owned facilities.

2.12. SAFETY

Refer to federal regulations and individual state laws concerning safety requirements relating to high voltage power lines of public utilities, which produce, transmit, or deliver electricity. The following explanations should not be regarded as a substitute for reading the laws, but are meant to highlight some of the major points.

2.12.1. Overhead Safety

Caution: Overhead wires and conductors are not insulated for protection from contact. Please exercise care when working near overhead facilities.

In an effort to prevent accidents involving contact with high voltage overhead lines, laws have been enacted to provide safer working conditions in these areas.

These laws apply, with few exceptions, to any person or business entity contracting to do work or perform any activity, which may bring an individual or equipment within 10 feet of high voltage overhead lines in excess of 600 volts. If work is to be performed within 10 feet of high voltage lines, the Cooperative shall first be contacted to arrange for safety provisions and a cost estimate for making those provisions will be provided. If there is a dispute over the amount to be charged, the Cooperative will proceed in a timely manner to provide the safety measures and the dispute will be settled at a later date. If work is begun after an agreement has been reached and before the safety provisions have been made, the person or entity performing the work shall be liable for damages resulting from contact with high voltage overhead lines.

Violations of these laws may result in a fine and/or possible liability for damages resulting from contact with high voltage overhead lines.

2.12.2. Underground Safety

Caution: Stakes, flags or painted lines mark the locations of underground utilities. Please dig very carefully within 24" on each side of the markings.

Anyone planning to dig in or near a public road, street, alley, right-of-way, or utility easement shall notify the Cooperative of your intent, no less than 48 hours (2 working days) before you dig. Call the telephone number listed below for your locale.

National, Call Before You Dig Line	811
✓Minnesota, Gopher State One Call (Outside Metro Area)	800-252-1166
✓Minnesota Gopher State One Call (Metro Area)	651-454-0002

Utility facilities may be buried along the rear, side, and front property lines in any of the residential areas. Residential service lines may cross homeowner's front and back yards. Many facilities are also located within the street, alley, or highway rights-of-way.

Color Codes: (Verify color codes used within your locale)

Red	Electric Power Lines, Cables, Conduit and Lighting Cables
Yellow	Gas, Oil, Steam, Petroleum, or Gaseous Materials
Orange	Communication, Alarm or Signal Lines, Cables or Conduit, including Cable Television
Blue	Water, Irrigation and Slurry Lines
Green	Storm Drain Lines/Sewer
Pink	Survey Markings White
	Proposed Excavation

2.12.3. Change of Grade

The grade in any public right-of-way or easement shall not be changed without first contacting the Cooperative to determine if electric facilities are contained within the right-of-way or easement. Permission may be granted to change the grade by the Cooperative if the grade change will not affect the minimum clearance requirements. Construction may be necessary if the grade change will necessitate moving equipment or facilities. The Cooperative can provide an estimate for the cost to relocate facilities when necessary to provide adequate clearance.

2.12.4. Unlock, Open and/or De-energize any Electric Power Equipment Procedures

The Cooperative established procedures to assure maximum safety to protect all individuals prior to unlocking, opening and/or de-energizing electric power equipment where access by unauthorized personnel is required. The following procedures apply to, but are not limited to, energized Cooperative facilities such as vaults, transformers, manholes, switchgear and secondary pedestals:

1) The customer shall request and receive access authorization prior to the Cooperative Representative unlocking, opening, and/or de-energizing any electric power equipment.

2) When a de-energized transformer is opened by the Cooperative Representative for a contractor to pull cable, the contractor shall contact the Cooperative and stand by until a Cooperative representative can relock the transformer before leaving the worksite.

3) Charges for work may apply when Cooperative personnel are required to open and close

transformers or other electric equipment and stand by while work is performed around energized equipment. The Cooperative Representative will determine the amount to be charged.

2.12.5. Energization of Electric Service

When requesting a new service, the Customer shall ensure that their main disconnect is in the open position, assuring panel bus serving feeders is de-energized until Cooperative completes the installation of the service including the meter installation. The Cooperative will not energize an electric service or set meters on new, rewired, altered, or repaired wiring installations unless all of the following conditions have been met:

1) The premises served have been properly identified by the customer.

2) Meter trace verifications have been performed by the Cooperative.

3) An inspection release from the local Public Authority has been received by the Cooperative.

   Note 1: In locations where there is no local Public Authority, the wireman shall submit a signed and dated letter to the Cooperative attesting that the electrical installation has been completed and installed according to the current National Electrical Code® and any other codes that apply before electric service is energized.

   Note 3: Services that have been shut off or disconnected for more than six months, must meet current installation requirements, in order for service to be reconnected.

4) The Cooperative Representative has verified that the service entrance shows no continuity, load, or voltage feedback on the load-side terminals of the electric meter socket or CT metering installation.

5) The Cooperative Representative has verified that the customers' equipment has a mechanical means to disconnect and isolate equipment from the load-side terminals of the self-contained electric meter socket or current transformers (CTs). This requirement includes, but is not limited to, any load produced by transformers (dry-type or oil-filled) that are used for a separately derived system.

   Note 1: Once a service is energized, it shall be the customer's responsibility to turn on load side breakers or close disconnecting switches.

6) The Cooperative Representative has verified that the electric service meets all of the requirements in Section 4.

   Note: The meter socket shall meet all requirements listed under METER SOCKETS in Section 4.

2.13. Wright-Hennepin LIMITED TELEPHONE DIRECTORY

Service Telephone Numbers:

✓ Builders Call Line for New or Existing Accounts	763-477-3150
✓ Reporting a power outage or emergency	763-477-3100
✓ Customer Service	763-477-3000

SECTION 3

3. CHARACTER OF SERVICE AVAILABLE

Contact the Cooperative for information regarding availability of any desired type of service in a given locale. Delays and unnecessary expense may be avoided by contacting the Cooperative in advance of construction.

3.1. TYPES OF SERVICE

The service voltages listed below may not be available in each of the Cooperative's service territories. The Cooperative will assist in determining whether the service voltage requested is offered under the Cooperative's Tariffs within the service territory. These service voltages are all derived from grounded transformer banks. Depending upon the service voltage, either the neutral or one phase conductor is grounded at the supply transformer and will be run from the transformer installation to the meter socket.

3.1.1. Available Service Voltages Provided by Wright-Hennepin

1. Single-phase: residential or commercial
   a. 240/120 volt, 3-wire
2. Multi-phase grounded *Wye*: large commercial or urban
   a. 208/120 volt, 3-wire [1-phase network metering]
   b. 208/120 volt, 4-wire
   c. 480/277 volt, 4-wire
3. Multi-phase *Delta*: small commercial or rural [closed to new accounts]
   a. 240 volt, 3-wire
   b. 240/120 volt, 4-wire
   c. 480 volt, 3-wire
   d. 480/240 volt, 4-wire
4. Primary service *Wye*: by special request
   a. 12.47/7.2 KV, 4-wire

3.2. METER SOCKETS FOR TYPES OF SERVICE

1) Self-Contained – Supplied by the customer (Refer to Section 4, METER SOCKETS):

   a) 1Ø 2W, 1Ø 3W and 3Ø 3W Delta - 5 terminal meter sockets [closed to new 480V installations]

   b) 3Ø 4W Wye and 3Ø 4W Delta - 7 terminal meter sockets [closed to new 277/480V installations]

2) Transformer Rated (CTs) - Supplied by the Cooperative:

   a) 1Ø 2W, 1Ø 3W - 8 terminal meter sockets

   b) 3Ø 3W Delta - 8 terminal meter sockets

   c) 3Ø 4W Wye and 3Ø 4W Delta - 13 terminal meter sockets

3.3. DISTRIBUTION (PRIMARY) SERVICE

Electric energy will be supplied at the voltage of Cooperative's distribution line of adequate capacity for the load to be served. The Cooperative will advise the applicant as to the primary voltage available and will specify the location of the primary metering installation.

3.4. TRANSMISSION SERVICE

Electric energy will be supplied at the voltage of existing transmission lines at locations specifically approved by the Cooperative.

SECTION 4

4. SERVICE FACILITIES

The Cooperative will provide service from either overhead or underground distribution facilities, depending upon availability and initial construction costs. Where there is a choice of overhead versus underground service, the Cooperative will normally offer the form requiring the least initial construction cost, in which case the customer may elect to choose the alternate, but charges will apply.

The customer shall confer with the Cooperative Representative before purchasing equipment, beginning construction of a proposed installation or altering existing service installations. The Cooperative Representative will determine if the type of service and voltage desired by the customer is available, determine if additions to the Cooperative's facilities will be required, and identify an acceptable meter location and point of delivery. The Cooperative Representative will arrange for all necessary alterations and determine any applicable fees.

When the Cooperative is required by order of a Public Authority to alter its distribution system, necessitating a change in the location of the point of delivery, the Cooperative will designate a new point of delivery. The customer, at his expense, shall relocate the service entrance conductors and metering equipment to the new point of delivery. The relocated service shall comply with the installation standards contained within this manual.

4.1. SERVICES

A building or other structure will be supplied by only one service, in accordance with 2014 *National Electrical Code*® Article 230.2, or as may be amended.

Only one service (point of delivery) will be provided to a building or other structure, except as specified below:

1) Special Conditions – Additional services may be provided by the Cooperative for:

   a) Emergency lighting.

   b) Fire pumps.

   c) Legally required standby systems.

   d) Optional standby systems.

   e) Parallel power production systems.

2) Special Occupancies – Additional services may be provided by the Cooperative for:

   a) Multiple-occupancy buildings where the Cooperative determines that there is no available space for service equipment accessible to all occupants.

   b) A single building or other structure where the Cooperative determines that such building or structure is sufficiently large to make two or more services necessary.

3) Capacity Requirements - Additional services may be provided where the Cooperative determines that it cannot adequately provide service at a single point of delivery. If a transformer larger than 1500 kVA is required, the Customer may be required to be served with primary service. Additional charges may apply.

4) Different Characteristics – Additional services may be provided by the Cooperative for different voltages or phases, or for loads with different rate schedules.

4.2. OVERHEAD SERVICE

4.2.1. Overhead System - Low Voltage (0-480 Volts)

General Requirements:

1) Service Connection - Overhead service drop conductors will be installed and connected to service entrance conductors in accordance with the Cooperative's Policies and Bylaws.

2) Point of Attachment - The Cooperative will specify the location of the service-entrance conductors most suitable for connection to the Cooperative's lines.

   a) The customer shall furnish and install the physical means of attachment.

   b) The point of attachment shall be located within 24" of the weather head and at a point nearest the Cooperative's facilities to be used to provide service. Refer to the Illustrations Section, Drawing K4-2G.

   c) The point of attachment shall be located such that adequate clearance can be obtained for the service drop from trees, awnings, patio covers, foreign wires, adjacent buildings, swimming pools, etc. Service drops shall not pass over adjacent private property, except where permitted by easement. Specified heights and clearances may be maintained by use of an approved service mast through the roof.

   d) Vertical Clearance from Ground – Refer to the most recent *National Electric Safety Code®* Article 232 and Table 232-1, or as may be amended. Service-drop conductors, where not in excess of 600 volts nominal, shall have the following minimum clearances from final grade:

      (1) 12.0' over spaces and ways subject to pedestrians.

      Exception 1: Where the height of a building or other installation does not permit the 12.0' clearance, 10.5' clearance for insulated service drops limited to 300 volts to ground and 10.0' clearance for insulated service drops limited to 150 volts to ground are permitted.

(2) 16.0' over driveways.

(3) 16.0' over other land traversed by vehicles.

(4) Drip loops shall meet the same clearances as specified above for service drops.

Exception 3: Where the height of a residential building does not permit the specified clearance, 10.5' clearance for insulated drip loops limited to 300 volts to ground and 10.0' clearance for insulated drip loops limited to 150 volts to ground are permitted
.

e) The point of attachment shall not be higher than twenty four (24) feet above final grade.

3) Service Mast/Riser Supports - Only the Cooperative's power service-drop or overhead service conductors shall be attached to a service mast. Service masts used for the support service – drop or overhead service conductors shall be installed in accordance with *National Electrical Code®* Article 230.28(A) and (B) or as may be amended. Phone loops, cable TV conductors, grounding clamps, etc. shall not be attached to the service mast or riser.

a) Service Mast - The service mast is the conduit containing the service-entrance conductors where the point of attachment and the connection between the service drop and the service entrance conductors is located **above** the roofline. The conduit extends to a point, and the weather head is located, above the roof eave. The conduit passes through the eave of the building or extends past the roofline without passing through the eave. The means of attachment is attached to the service mast. Service masts shall be 2" minimum GRC metallic conduit. The point of attachment shall not exceed 48" above the roofline. If the weather head exceeds 48" above the roofline, then the mast shall be braced or guyed by the customer. Conduit couplings shall not be installed above the roofline. Refer to the Illustrations Section **Drawing K4.2G** showing typical installation method.

b) Service Riser - The service riser is the conduit containing the service-entrance conductors where the point of attachment and the connection between the service drop and the service-entrance conductors is located on a pole or **below** the roofline of the building being served. The conduit extends to a point, and the weather head is located, below the roof eave. The means of attachment is secured to the pole or building and is not attached to the service riser. Refer to the Illustrations Section, **Drawing K4.1G** showing typical installation method.

4) Ice and Snow Shields - All electric meters shall be located on the gable or non-drip side of a building or other structure, and there shall be no adjacent rooflines, which will drip directly on or towards a neighboring meter installation. Whenever possible, install meter socket on gable end of buildings or under an eave with sufficient overhang to ensure maximum safety. Any installation deemed unsafe by the Cooperative may be disconnected. Refer to the Illustrations Section, **Drawing K4-4G** showing typical installation methods.

5) Service Drops - The allowable length of service drop conductors shall be governed by the slope of the ground, intervening trees and obstructions, and the size of the conductor required.

Conductor (Duplex , Triplex or Quadraplex)	**Maximum Service Span*** (Utility pole to House knob)
#6	110’
#4	110’
#2	90’
1/0	80’
4/0	Underground required
500	Underground required

*Service tension is limited to 800lbs under ½” 32º F ice loading conditions

6) Secondary Poles – If the service span length is larger than allowed in the table above, secondary will need to be extended to a new Cooperative provided pole on the customer’s property. From the new pole the service can be extended to the house. A suitable easement may be required before such installation is made.

7) Service Entrance Conductors - Service entrance conductors in the customer service entrance conduit shall have a current carrying capacity at least as great as that required by the *National Electrical Code*® and the Public Authority having jurisdiction. The Cooperative strongly recommends that some provision be made for future load increase. A sufficient length of wire, but in no case less than twenty-four (24) inches on residential or thirty-six (36) inches on commercial services, shall extend from the service weather head for connection to the Cooperative's service drop. Line and load conductors are not permitted in the same raceway or conduit. No conductors, other than service entrance conductors, shall be installed in the service entrance conduit. All line-side (non-metered) conductors shall be in a continuous length of conduit from the point of delivery to the meter socket or the cold sequence metering disconnect. Junction boxes, conduit fittings (e.g. LB’s), or other devices are not allowed without specific approval from the Cooperative.

4.2.2. Overhead System - Primary Voltage (Above 480 Volts)

Because of safety precautions, which must be exercised in the utilization of energy at voltages in excess of 480 volts, the Cooperative shall be consulted in regard to service entrance, transformer location, and meter installation details for this class of service before construction is started.

Overhead service of 2400 volts or greater will not be attached directly to a building. Refer to the Illustrations Section **Drawing Q4.2**, for typical installation of primary voltage service.

4.3. UNDERGROUND SERVICE

4.3.1. Underground System - Low Voltage (0-480 Volts)

General Requirements:

1) Service Connection - Underground service laterals from underground distribution systems or overhead distribution systems shall be installed in accordance with the Cooperative's Policies and Bylaws.

2) Point of Entry - The Cooperative shall specify the location of the underground service lateral and metering equipment location most suitable for connection with the Cooperative's facilities. The Cooperative will not run an underground service lateral through a wall below grade or above the first floor level.

3) Ice and Snow Shields - A meter ice and/or snow shield may be required on any meter installation deemed unsafe by the Cooperative due to snow or ice falling/sliding off of a roof. Whenever possible, install meter socket on gable end of buildings or under an eave with sufficient overhang to ensure maximum safety. Refer to the Illustrations Section Drawing K4-4G, showing typical installation methods.

4) Underground Service Laterals - Laterals shall not be installed until property is to final grade (+/- 6 inches), property pins are in place, and the cable route is free of obstructions.

   a) Cooperative owned service laterals shall not be installed at a depth of less than twenty-four (24) inches.

   b) Customer-owned commercial and industrial service laterals shall be installed in accordance to the *National Electrical Code*® in effect or as amended.

   c) Electric and plastic gas services within the same trench shall be separated by twelve (12) radial inches. **Steel gas services shall not be installed in the same trench with an electric service** and require a minimum of twelve (12) radial inches of separation. See Drawings UR2-NT.

   d) Service conductors under hardscape shall be in conduit where the conduit extends two (2) feet beyond the hardscape edge.

   e) Conduit elbows for service wire shall have a minimum radius of thirty-six (36) inches.

   f) In accordance with the NESC Section 351C2, buildings or other structures are not permitted to be located directly above or within 12 inches of underground conductors. In the event a building, structure or landscape structure is built over underground conductors, the customer may be responsible for costs associated with relocating the service conductors.

5) Ground Movement – A ground grip or anchor sock attached to the foundation shall be furnished and installed by the Cooperative on all new and rewired underground residential meter installations and recommended for all commercial installations.

   a) The sock will be anchored directly behind the conduit below grade.

      Refer to the 2014 *National Electrical Code*® Article 300.5(J), or as may be amended and to the Illustrations Section **Drawing UM8** for typical slip sleeve installations.

6) Service Entrance Conductors - Service entrance conductors from the utility meter to the customer panel shall have a current carrying capacity at least as great as required by the *National Electrical Code*® and the Public Authority having jurisdiction. The Cooperative strongly recommends that some provision be made for future load increase. Line and load conductors are not permitted in the same raceway or conduit. No conductors, other than service conductors, shall be installed in the service lateral conduit. Each service run shall be contained within its own conduit (A, B, C phases and neutral) on commercial services. Junction boxes, conduit bodies (e.g. LB's), or other devices are not allowed without specific approval from the Cooperative. Drawings showing typical methods for installing service-entrance conductors are contained in the Illustrations Section **Drawing UM8**.

7) Conductors in a Meter Socket - On an underground service, the center knockout in the bottom of the socket, if provided, shall not be utilized. Line conductors shall enter through the knockout provided at the left side of the bottom horizontal surface of the meter socket. The line conductors shall be routed along the outermost edges of the meter socket allowing for ground settling, which could pull the line conductors down. Either the knockout on the right side of the bottom horizontal surface, the lower knockout on the right vertical surface, or the lower knockout on the back vertical surface of the meter socket may be used for load conductors. Load conductors shall <u>not</u> exit the left side of the meter socket. Any deviations require Cooperative approval. Refer to the Illustrations Section, **Drawing UM8.**

4.3.2. <u>Underground System - Primary Voltage (Above 480 Volts)</u>

The Cooperative shall be consulted in regard to service entrance, transformer location, and meter installation details for this class of service **<u>in advance of construction and/or purchase of equipment.</u>** The customer's engineering electric drawings shall detail the position of PT's & CT's and metering bay layout. Primary metering designs must be approved by the Cooperative prior to construction. Refer to Illustrations Section **Drawing UM1-G4** for primary meter cabinet clearance requirements.

4.4. SERVICE LATERAL SIZES (for balanced load). See Illustrations Section Drawing UM1-G2:

4.5. CONDUIT SIZING CHART:

The following is a list of pipe or duct size that can be used for cable installations exiting transformers that are less than 300 kVA. This table is based on 40% maximum pipe fill.

Cable Size	Voltage	# Cond/Conduit	Pipe Size (I.D.)
1/0-2-1/0	600 V	1 Set	2” PVC or PE or 2” flex
4/0-2/0-4/0	600 V	1 Set	3” PVC or PE or 3” flex
350-4/0-350	600 V	1 Set	4” PVC or PE
350 AL/CU	600 V	1-5	5”
350 AL/CU	600 V	6-8	Two 5”
750 AL/CU	600 V	1-4	5”
750 AL/CU	600 V	5-8	Two 5”

- Conduit or Conduit fittings made from a ferrous material may not be used when separating three-phase runs into separate conduits.
- Customer shall furnish cable to Cooperative transformer from panel when no transition cabinet exists. The Cooperative will utilize Utilco connections in transformers up to 300 kVA.
- For transformer installations that are 300 kVA and larger, the Cooperative will require up to 9 runs, 4-inch conduits as illustrated in Drawing UM1-G2. Each PVC conduit shall be dedicated to its own phase or neutral per set. The Cooperative will furnish secondary wires and terminations between the transformer and customer supplied transition cabinet.
- Transition cabinets are required for 1600 Amp services and above.
- Install minimum ¾” PVC conduit to exit pad for installation of grounding connection.

PADMOUNTED TRANSFORMERS			
KVA	**Copper** *(Conductor/Phase)*	**Aluminum** *(Conductor/Phase)*	**4" Conduits Required**
208 Grd Y/120 Volt			
300	3 - 500	2 - 750	4
500	4 - 500	4 - 750	4
750	6 - 500	6 - 750	4
* 1000	8 - 500	8 - 750	8
480 Grd Y/277 Volt			
300	1 - 500	1 - 750	4
500	2 - 500	2 - 750	4
750	3 - 500	3 - 750	4
1000	4 - 500	4 - 750	4
1500	6 - 500	6 - 750	6
* 2000	7 - 500	7 - 750	7
*2500	9-500	9-750	9
240/120 Volt 1 ∅			
167	2 - 500	2 - 500	4

*Requires bushing support

4.6. TRANSFORMER INSTALLATIONS - NETWORK VAULTS

Transformer vaults are not an approved standard installation for WH. Prior approval is required for all network vaults and the following rules shall apply:

1) Where it is necessary to provide a vault for transformers and related equipment, all necessary, engineering and vault construction, including relocating facilities, shall be accomplished by the building owner at no cost to the Cooperative and requires WH final approval.
2) All easements required for electric installation shall be granted by the owner to the Cooperative at no charge.

3) All transformer vaults shall be constructed in accordance with the latest revision of the *National Electrical Code*®, any other applicable codes and the Cooperative's specifications. The customer, upon request by the Cooperative, shall authorize in writing that the Cooperative may declare and operate the vault and equipment therein as a Cooperative Substation.

4) In addition to the requirements of the *National Electrical Code*®, the following general requirements shall be observed:

   a) Access for Cooperative personnel and equipment is required. Such access shall be available to Cooperative personnel at all times. The customer shall provide a hasp or other suitable means to accommodate the Cooperative's lock.

   b) If access to the vault does not permit the use of Cooperative equipment for removal, relocation, and installation of vault facilities, the customer shall provide the means to remove, relocate, and install the Cooperative's facilities.

   c) The vault shall be suitably illuminated and a convenience outlet shall be provided at the expense of the customer. The light control switch and convenience outlet shall be located inside the vault and shall be connected to the unmetered bus.

   d) The customer's equipment, fuses, etc. shall not be installed in the vault.

   e) The customer shall provide a Cooperative approved separate ventilation system to the outside air. The vault's ventilation ducts shall not, under any circumstances, be tied into the building ventilation system.

   f) Vaults shall be provided with a retaining or holding tank system to collect any oil spillage. Any water entering the vault must be drained away from the vault separate from any oil. Provisions shall be made to pump any oil collected in the sump from the vault.

   g) Because of the variety of special problems arising during the construction of building vaults, only the most general specifications covering their design and arrangements are presented herein. The Cooperative shall be consulted well in advance of any proposed project.

   h) The Cooperative will not energize any building vault transformer for temporary or permanent service until all vault specifications are met, a final checklist of vault specifications is approved by the Cooperative Engineer, and the vault has been turned over to the Cooperative for occupancy.

4.7. TRANSFORMER INSTALLATIONS - PAD-MOUNTED

The Cooperative will provide an outdoor pad-mounted transformer for service to the customer's facilities such as shopping centers, office buildings, schools, large apartment buildings, etc. under the following conditions:

1) The Cooperative will own, operate and maintain the primary underground installation between the adjacent distribution facilities and the transformer, including the primary cable, ducts, transformer and protective equipment.

2) The Customer shall provide an adequate base at finished grade for the installation of the Cooperative's pad and pad-mounted transformer. In areas near buildings where earth has been disturbed, the customer shall provide firm soil conditions.

3) All concrete forms are to be inspected and approved by the Cooperative before pouring concrete.

4) The Cooperative will make and maintain all connections at the transformer terminals. No customer-owned switches, fuses, etc. may be located within a fenced area designed to contain a transformer installation without written approval of the assigned Cooperative.

5) The property shall be to final grade (±6 inches) except at the equipment location, which shall be to exact final grade. The property must be level and clear for ten (10) feet to allow for operation and maintenance of the pad mounted equipment. Property pins shall be in place with the structure staked or the foundation in, prior to installation of the pad-mounted equipment and splice boxes.

6) The Cooperative shall be consulted well in advance of any proposed project.

7) If, in the judgment of the Cooperative, the selected location for the installation of the pad-mounted equipment is not adequately protected from traffic, or when directed by the local Public Authority, the customer shall furnish and install bollards or guard posts to protect the pad-mounted equipment installation.

Further details relating specifically to transformers can be found in Section 5. Refer to the Illustrations Section **Drawings** UM1-G1, UM1-G2, UM1-G3, UM1-6C, UM1-8C & UM1-9C for typical pad-mounted transformer installation and clearance requirements.

4.8. POINT OF DELIVERY

The point of delivery is the point where the Cooperative's electric facilities are first connected to the electric facilities of the customer. The point of delivery for the various classifications of service is shown throughout the Illustrations Section.

It is the policy of the Cooperative to own, operate, and maintain the electric distribution facilities up to the point of delivery. This policy is applicable to service rendered from either overhead or underground facilities. All such facilities will be installed in accordance with the Cooperative's Line Extension Policy and Policies and Bylaws.

4.9. CUSTOMER-OWNED SERVICE CONDUCTORS

The electric service line installed by the Cooperative shall remain the property of the Cooperative. Any payment made by the customer shall not entitle him to ownership interest there in.

For special load types or projects that have limited workspace for machinery such as steep grades and obstructions, the Cooperative may require the owner to run Cooperative approved secondary wire or conduit to a designated Point of Delivery that allows the Cooperative to feasibly connect to and maintain its facilities into the future.

The number and size of customer-owned conductors that may be terminated to Cooperative facilities is limited by the type of installation as follows:

1) Overhead-to-Overhead:

    a) Service entrance risers on a building are limited to a maximum number of six (6), with a single set of conductors in each riser.

    b) The Cooperative will specify the minimum and maximum conductor size, which will typically not exceed 350 kcmil for 3-phase or 1/0 for single phase.

2) Overhead-to-Underground:

    a) A maximum of three U-guard risers per pole (including Cooperative-owned, foreign utility owned and/or customer-owned) shall be attached to a Cooperative pole and properly supported to not pull away from pole.

    b) Forty (40') feet of customer owned conductor shall be coiled at the base of Cooperative pole, where applicable. If customer installs conduit from structure to base of pole, customer may install elbow at pole but under no circumstances install any customer-owned conduit on Cooperative-owned pole.

    c) Customer-owned conduit at the base of the Cooperative's pole shall not exceed six (6) inches above final grade.

    d) The U-guard risers shall be grouped together and shall not occupy more than 40% of the pole circumference.

    e) Only a single set of conductors is allowed in each U-guard riser.

    f) The conductor size shall not exceed 350 kcmil.

3) Underground:

a) Three-Phase Pad-mounted Transformer. The maximum conductor size shall not exceed 500 kcmil copper or 750 kcmil aluminum. See section 4.5 CONDUIT SIZING CHART for information on conduit sizes.

i) A secondary connection cabinet is required when the Customer's service size is 1600A or greater.

ii) When not required, a secondary connection cabinet may also be installed at the customer's discretion.

iii) All secondary connection cabinets with or without metering provisions shall be provided by the Customer and placed adjacent to the transformer. Refer to the Illustrations SectionUM1-8C and UM1-9C.

iv) All secondary connection cabinets with or without metering provisions shall have a 3-point latch with provisions for a Cooperative padlock and door(s) shall be hinged on either the left or right side.

b) Single-Phase Pad-mounted Transformer - The maximum number of secondaries or services per phase that are to be served from a single-phase transformer is based on cable size. For cables larger than 350 kcmil a maximum of 4 runs are allowed. For residential applications, a maximum of 6 runs of 350 kcmil are allowed.

c) Single-Phase Pedestal – The maximum number of conductors in a standard single-phase pedestal, with six-position URD holes, is 18. This includes one secondary feed from the transformer and 5 services. The maximum conductor size shall not exceed 350kcmil aluminum. If a street light feed is required, or if any additional services need to be run from the pedestal, an 8 position URD hole shall be used.

4.10. METERING

4.10.1. New Services

The Cooperative will not permit a temporary unmetered service on new electrical services. Service may be supplied from a temporary meter panel prior to an inspection release on new services. Refer to Section 4, TEMPORARY SERVICE and the Illustrations Section, **Drawings K4.3G & UM8-G1**.

Before permission will be granted to energize a new service, an inspection release shall be provided to the Cooperative by the local Public Authority.

4.10.2. Existing Services

Before a meter will be installed on an existing service, which has been rewired, altered, or repaired, an inspection release shall be received by the Cooperative from the local Public Authority.

Temporary Unmetered Services are not allowed.

4.10.3. Meter Installation And Ownership

All service to a customer will be supplied by a single service (point of delivery) and only one meter will be installed at an address or single unit of a multi-unit building. Only in the event that more than one service is allowed by the Cooperative as detailed in SERVICES in this Section, will the Cooperative install more than one meter.

Only authorized Cooperative employees or qualified individuals authorized by the Cooperative are permitted to connect, disconnect, move or remove meters. All meters, service wires, and other electrical facilities installed by the Cooperative upon the customer's premises for delivering or measuring electrical energy to the customer shall continue to be the property of the Cooperative. All metering equipment owned by the Cooperative and not installed shall be returned to the Cooperative. These facilities may be repaired, inspected, tested, relocated, replaced, or removed by the Cooperative.

4.10.4. Classification Of Metering

Refer to Section 1 for the definition of Classification of Metering.

The Cooperative classifies its metering installations as

1) Residential Rate:

    a) Self-Contained

    b) Instrument Transformer

2) Commercial and Industrial Rates:

    a) Self-Contained

    b) Instrument Transformer

    c) Temporary Construction

The type of metering used will be determined by the Cooperative based upon: the service voltage, the load supplied, the available fault current, and the applicable Rate Schedule.

Cooperative Engineering approval is required for all services that serve multi-family dwellings greater than 600 Amps. If service is Commercial such as an apartment building, then the service lateral shall be installed by the customer.

All services shall be metered on the secondary side of the Cooperative's transformer unless the applicable Rate Schedule specifies that the service be metered on the primary side of the transformer. The Cooperative may install its meter on either side of the transformer and losses occurring between the point of delivery and the meter will be computed and added to, or subtracted from, the reading of the meter. Cooperative approvals are required for Primary Rate installations and will only be considered under extenuating circumstances.

4.10.5. Self-Contained Metering

Single-phase and 120/208V or 120/240V three-phase services with a total connected load of 200 amps or less shall be metered by self-contained meters.

Single-phase services with a total connected load of 200-320 amps may be metered by either 320 amp self-contained or instrument transformer metering.

Single-phase services where the total connected load is in excess of, or anticipated to be in excess of, 320 amps shall use instrument transformer metering.

Three-phase services where the total connected load is in excess of, or anticipated to be in excess of, 200 amps and all three-phase services rated above 240V shall use instrument transformer metering.

The total amp rating of the main disconnect(s) shall not exceed 250 amps for a 200 amp continuous duty rated meter socket or 400 amps for a 320 amp continuous duty rated meter socket.

> All self-contained single position and/or modular (multi-position) meter sockets that are of either single- phase or three-phase design shall be furnished, owned, installed, and maintained by the customer. All self-contained meter sockets shall be Nationally Recognized Testing Laboratory (NRTL) listed and labeled and will be inspected by the local Public Authority for compliance to the *National Electric Code®* and any other applicable codes. ***All meter sockets shall have a locking jaw lever bypass.*** The construction of the meter sockets shall also conform to the Cooperative's standards as described in METER SOCKETS in Section 4.13.

K-base type meter socket installations are not allowed within the Cooperative's service areas.

Note: The service entrance conductor intended to be connected to the high-leg of a 3-phase, 4-wire delta-connected system shall be durably and permanently marked at both ends of the conductor by an outer finish that is orange in color in accordance with 2014 National Electrical Code® Article 110.15, or as may be amended, and shall be installed in the far right hand position of the meter mounting block. Refer to the Illustrations Section ***Drawing 16S-3****.*

4.10.6. Instrument Transformer Metering, Secondary Voltage

Hot sequence is the required installation method for instrument transformer (CT) metering. A cold sequence disconnecting device is not allowed ahead of a CT cabinet unless required by local Public Authority having jurisdiction.

The maximum metered load shall not be greater than 4000 amps.

The CTs and meter-socket will be supplied, owned, and maintained by the Cooperative and shall be installed by the customer. The instrument transformer compartment in a CT cabinet, service connection cabinet, or switchgear CT compartment, and the necessary conduit and fittings shall be supplied, owned, installed, and maintained by the customer. The Cooperative will terminate the line-side conductors and the customer shall terminate the load-side conductors in a secondary connection cabinet. All other CT cabinet or switchgear CT compartments, terminations will be done by the customer on both the line and load side. The secondary (metering) conductors will be supplied, owned, installed, and maintained by the Cooperative. Customer-owned equipment, other than service conductors, shall not be installed in the space dedicated to instrument transformers.

All current transformers (CTs) shall be installed in a CT cabinet, secondary connection cabinet, or switchgear CT compartment. Refer to METERING, CT Cabinets, secondary connection cabinets (with or without Optional Customer Disconnect Switch and Metering Provisions) and Switchgear CT Compartments in this Section.

The following CT installations are **not allowed** on new installations or replacements/upgrades:

1) Rack mounted on mast, pole or side of building using donut or window type CTs.

2) Grecian urn or over-the-bushing type CTs mounted in the Cooperative's distribution transformer.

The CTs shall be installed in such a manner that the secondary (metering) terminals are readily accessible from the door of the CT compartment. The CTs shall be mounted such that the H1 "white dot" marking for polarity is on the line side. When bar-type CTs are installed, the bolts used to make the connections shall be the largest standard diameter that will fit through the holes or slots provided for this purpose.

Conductors in CT cabinets and service connection cabinets shall be installed in accordance with the requirements of 2014 *National Electrical Code*® Article 312.6, or as may be amended.

Metering conduit installed below grade (underground) from the meter-socket to the CT cabinet (or compartment) shall be minimum 1" Schedule 80 PVC. Metering conduit installed above grade (above ground) from the meter-socket to the CT cabinet (or compartment) shall be minimum 1" GRC, IMC, or EMT. Metering conduit shall be a continuous run between the meter socket and the CT cabinet. The conduit run shall not exceed 25 feet in length. Installations requiring conduit runs greater than 125 feet are not allowed without prior approval from the Cooperative. For installations of 25-125 feet, the metering conduit shall be 1 ¼" GRC, IMC, or EMT and furnished with wire by the customer. If the conduit run exceeds 25 feet in length, the total degrees of bends shall not exceed 180, the equivalent of two 90 degree bends. Junction boxes, conduit bodies (e.g. LB's), or other devices are not allowed.

The meter socket shall be bonded with a separate bonding conductor in accordance with the 2014 *National Electrical Code*® Article 250, or as may be amended.

4.10.7. CT Cabinets

In addition to the requirements in METERING, Instrument Transformer Metering, Secondary Voltage in this Section, the following requirements shall also be met:

1) The CT cabinet (enclosure) shall meet a minimum of NEMA 3R standards.

2) The maximum connected load shall not be greater than 4000 amps per metered service.

3) The CT cabinet shall be Nationally Recognized Testing Laboratory (NRTL) listed and labeled as a CT enclosure (UL and/or Third-party certification).

4) CT cabinets rated from 400 to 800 amps shall have mounting provisions for bar-type CTs. Refer to the Illustrations Section Figure M1**.**

5) CT cabinets rated from 801 to 4000 amps shall have a removable bus section with a 12" minimum length, 5" maximum width, and an insulated CT support which will accommodate window-type CTs. The removable bus section shall have an enclosed screw type compression terminal to accommodate a minimum #12 AWG metering potential conductor on the line-side section of the bus. Refer to the Illustrations Section **FIGURE M1.**

6) The CT cabinet shall be furnished with factory installed landing pads and lugs for phase and neutral conductors.

7) The neutral bus shall have a neutral lug which will accommodate one #12 AWG Cu solid through two #10 AWG Cu stranded wire(s) for the metering neutral conductors.
8) All instrument transformer compartments shall have barriers between adjacent areas.

9) The door shall be hinged either on the left or right side and be equipped with a hasp for a Cooperative padlock with a 5/16" diameter shackle. Latching methods shall utilize captive fasteners. Studs with wing nuts are **not** allowed.

10) The installation height of the CTs shall be between 2'-0" minimum and 6'-0" maximum measured from the center of the CTs to final grade. The minimum clearance from the bottom of a wall-mounted CT cabinet to final grade shall be 1'-0".

11) The service entrance conductor connected to the high-leg of a 3-phase, 4-wire delta system shall be durably and permanently marked at both ends of the conductor by an outer finish that is orange in color in accordance with 2014 *National Electrical Code®* Article 110.15, or as may be amended. For 200 A self-contained services, the high leg shall be installed in the right-hand phase position for vertical bus or the bottom phase position for horizontal bus in the CT cabinet.

12) The preferred method of CT cabinet wiring for overhead services, the line-side conductors shall enter and terminate in the top half of the CT cabinet, and the load-side conductors shall exit and terminate in the bottom half. Likewise, for underground services, the line-side conductors shall enter and terminate in the bottom half of the CT cabinet, and the load-side conductors shall exit and terminate in the top half. Neither the line-side nor the load-side conductors shall cross the horizontal centerline of the CT cabinet.

13) Refer to the table below for a CT cabinet minimum dimension guideline.

DIMENSIONS FOR WALL-MOUNTED CT ENCLOSURES AND SWITCHGEAR
Guideline

Ampacity	Minimum Number of Conductor Terminals to Provide	Vertical Bending Space (1ϕ & 3ϕ)	Depth (3ϕ)	Depth (1ϕ)	Width (3ϕ)	Width (1ϕ)
400	1	18”	10”	10”	30”	24”
600	2	18”	10”	10”	30”	24”
800	2	24”	12”	10”	32”	24”
1000	3	24”	12”	----	32”	----
1200	4	27”	12”	----	32”	----

*Refer to the Illustrations Section Figures M1 & M2**.**

4.10.8. Secondary Connection Cabinets with metering provisions.

Single point services to multiple tenants may be metered with a pad-mounted secondary connection cabinet with or without customer disconnect switch. The use of a secondary connection cabinet with a customer disconnect switch allows the customer the ability to de-energize his own service for equipment maintenance without calling the Cooperative to schedule an outage. The secondary connection cabinet shall be located adjacent to the distribution transformer. Refer to the Illustrations Section **Drawing UM1-8C & 9C.**

Note: Refer to SERVICES and also METERING, Meter Installation and Ownership in this Section for clarification on the allowable number of service and metering points.

In addition to the requirements in METERING, Instrument Transformer Metering, Secondary Voltage in this Section, the following requirements shall also be met:

1) The maximum connected load shall not be greater than 4000 amps per metered service.

2) Secondary connection cabinets from 400 to 800 amp rating shall have mounting provisions for bar-type CTs. Refer to the Illustrations Section Figure M2.

3) Secondary connection cabinets from 801 to 4000 amps shall have a removable bus section with a 12" minimum length, 5” maximum width, and an insulated CT support which will accommodate window-type CTs. The removable bus section shall have an enclosed screw type compression terminal to accommodate a minimum #12 AWG Cu metering potential conductor on the line-side section of the bus. Refer to the Illustrations Section Figure M2.

4) The neutral bus shall have a neutral lug which will accommodate one #12 AWG Cu solid through two #10 Cu AWG stranded wires for the metering neutral conductors.

5) The door(s) shall be hinged either on the left or right side and be equipped with a 3-point latch with provisions for a Cooperative padlock with a 5/16" diameter shackle.

6) The installation height of the CTs shall be between 2'-0" minimum and 6'-0" maximum measured from the center of the CTs to the bottom of the cabinet.

7) The phase arrangement on 3-phase installations shall be A, B, C front-to-back, top-to-bottom, left-to-right when viewed from the front of the equipment.

The customer shall install the pad and pad-mounted secondary connection cabinet in accordance with the Illustrations Section **Drawings UM1-6C & UM1-8C**.

4.10.9. Switchgear CT Compartments

In addition to the requirements in METERING, Instrument Transformer Metering, Secondary Voltage in this Section, the following requirements shall also be met:

1) Switchgear CT Compartments from 400 to 800 amp rating shall have mounting provisions for bar-type CTs. Refer to the Illustrations Section Figure M2.

2) Switchgear CT Compartments from 801 to 4000 amps shall have a removable bus section with a 12" minimum length, 5” maximum width, and an insulated CT support which will accommodate window-type CT. The removable bus section shall have an enclosed screw type compression terminal to accommodate a minimum #12 AWG metering potential conductor on the line-side section of the bus. Refer to the Illustrations Section Figure M2.

3) The maximum connected load shall not be greater than 4000 amps per metered service.

4) A metering neutral lug, which will accommodate one #12 AWG Cu solid through two #10 AWG Cu stranded wires for the metering neutral conductors, shall be available near the front of the CT compartment so that it can be safely accessed even if the switchgear is energized.

5) All instrument transformer compartments shall have barriers between adjacent areas.

6) The door shall be hinged either on the left or right side and be equipped with a hasp for a Cooperative padlock with a 5/16" diameter shackle. Latching methods shall utilize captive fasteners. Studs with wing nuts are **not** allowed.

7) The installation height of the CTs shall be between 2'-0" minimum and 6'-0" maximum measured from the center of the CTs to the bottom of the switchgear.

8) Current Transformer Compartment shall have a minimum clearance of 12” from the bottom of enclosure door to final grade.

9) The phase arrangement on a 3-phase installation shall be A, B, C front-to-back, top-to-bottom, left-to-right when viewed from the front of the switchgear, in accordance with 2014 *National Electrical Code*® Article 408.3(E) or as may be amended. The B-phase shall be that phase having the higher voltage to ground on a 3-phase, 4-wire delta system. Other busbar arrangements shall be permitted for additions to existing installations and shall be marked. See also section 110.15 for markings of a 3-phase, 4-wire delta system.

   Exception: Equipment within the same single section or multisection switchboard, switchgear, or panelboard as the meter on 3-phase, 4 wire delta-connected systems shall be permitted to have the same phase configuration as the metering equipment

10) On some types of 400 and 800 amp bar-type CT compartment, the neutral bus bar can be physically relocated to the center phase position for use in a 3-phase, 3-wire corner-grounded system (closed to new accounts). The customer shall furnish and install the bus work on the grounded (center) phase.

4.11. TEMPORARY SERVICE

Temporary service may be made available prior to the installation of the permanent meter. Temporary service shall be restricted to as short a time as possible, such as the time necessary for the construction of a building. Temporary service will be provided by the Cooperative in accordance with ts established Rate Schedules, Policies, and Schedule of Charges.

4.11.1. Overhead Temporary Service

The overhead service drop support shall be supplied by the customer in accordance with the requirements shown in the Illustrations Section, and the additional requirements of this Section. The support shall be within 80 feet of a pole supporting the Cooperative's secondary lines with conductor no larger than 1/0. The support shall be located in such a manner as to clear all utility obstructions. The overhead drop shall overhang only the property owned and controlled by the customer and shall clear all structures and obstacles in accordance with the Illustrations Section, Drawing K4-3G.

4.11.2. Underground Temporary Service

The underground service lateral and meter support shall be supplied and installed by the customer in accordance with the requirements shown in the Illustrations Section Drawing UM8-8, and the additional requirements of this Section. The meter pedestal shall be installed near the secondary pedestal or pad-mounted transformer and clear of the future permanent service route. The grounding electrode conductor shall be furnished and installed by the customer and shall comply with the 2014 *National Electrical Code*® Article 250, or as may be amended. The ground rod(s) shall be furnished and installed by the customer and shall be installed outside of all utility easements.

4.11.3. Requirements for Temporary Service

Temporary service shall normally be served from the distribution transformer or secondary pedestal.

Entry into and connections within all pad-mounted or underground facilities will be made by the Cooperative. The meter socket shall be furnished and installed by the customer. Temporary service installations shall be braced as shown in the respective Drawings in the Illustrations Section to withstand normal service drop tension and normal use of the facility.

Temporary meter service panels shall not be attached to vehicles or trailers. Refer to the Illustrations Section K4-3G & UM8-G1 Drawings for acceptable temporary meter panel designs. In the event that a temporary service installation fails or collapses, it will be disconnected by the Cooperative until repaired by the customer.

4.12. PRIMARY METER INSTALLATIONS

Primary metering installations require coordination between the customer and the Cooperative regarding technical details and location. Service at distribution primary voltage requires special engineering considerations; therefore, it is necessary to determine availability of this type of service. The Cooperative shall be consulted well in advance of the time the service will be required so that all design and construction work of both parties may be properly coordinated.

Primary voltage installations use both current and voltage instrument transformers regardless of the load current.

4.12.1. Overhead

The primary meter installation will be installed on a Cooperative-owned pole.

4.12.2. Underground

Primary metering enclosures shall be installed outside of the building within an easement provided by the customer and located on the customer property. Any primary transfer switching shall be owned and operated by the Cooperative. Primary metering and transfer switching is subject to Aid-to-Construction charges according to the Cooperative's Schedule of Charges and billed according to the rate in effect.

Wright-Hennepin does not allow customer-owned primary metering. Refer to the Illustration Section **Drawing Q4-2 and UM1-G4.**

4.13. METER SOCKETS

4.13.1. Self-Contained Meter Sockets

Purchasing, installing, connecting, and maintaining self-contained meter sockets shall be the responsibility of the customer.

All meter sockets shall be Nationally Recognized Testing Laboratory (NRTL) listed and labeled, used in accordance with their labeling, installed per the 2014 *National Electrical Code*®, or as may be amended, and meet any code requirements that may be enforced by the local Public Authority.

All single and multiple position meter sockets installed on the Cooperative's system shall meet the

Cooperative's standards for these devices as listed on the following pages. Cooperative Electric Meter Personnel are instructed not to install a meter at a location where the meter socket does not comply with **all criteria listed below**. Meter sockets will be considered un-approved unless they adhere to this criteria.

1) Individual meter sockets shall be constructed from steel. Sockets constructed from aluminum or non-metallic materials are not allowed.

2) Individual meter sockets, excluding side-wired type which are bussed on the line side of the meter, used in underground installations shall have the following minimum dimensions:

   a) 200 amp – 19" height x 13" width.

   b) 320 amp – 26 ½" height x 13" width.

3) Temporary cover plates for meter sockets shall be constructed from a non-metallic material.

4) Single-phase meter sockets shall be rated for either 200 or 320 amp and three-phase 200 amp meter sockets shall be rated for 200 amp continuous duty and shall be equipped with an approved lever-actuated locking-jaw bypass constructed such that the bypass lever cannot be in the bypass position with the socket cover installed. The bypass handle shall be located on the right side of the meter block when facing the meter block. The only approved bypasses are the Talon (Landis & Gyr) HQ, Square D, Milbank HD (Heavy Duty), and Cooper B-Line.

   All meter sockets shall have a locking jaw lever bypass.

5) Sockets shall be equipped with an insulating, track-resistant polycarbonate safety shield.

6) Single-phase and three-phase, three-wire sockets shall have a fifth terminal connected to the neutral within the socket with minimum #16 AWG wire. The fifth terminal shall be installed in the 9 o'clock, rather than the 6 o'clock, position if the meter block design allows. The Cooperative will not furnish or install the fifth terminal.

7) Three-phase, four-wire sockets shall have the seventh terminal connected to the neutral within the socket with minimum #16 AWG wire.

8) Sockets shall have ringless style covers. No screws, studs or wing nuts are allowed to secure meter covers.

9) Sealing means shall provide for a plastic padlock seal with a 0.047" diameter shackle and a key type padlock with a $^{9}/_{32}$" shackle.

10) 320A meter sockets shall have an anti-inversion clip installed in the top right terminal.

Additional Requirements for Self-Contained Multiple Metering Panels:

1) Multiple metering panels shall be constructed from steel or aluminum. Panels constructed from non-metallic materials are not allowed.

2) Each meter socket shall have an individual ringless style cover with sealing provisions. No screws, studs or wing nuts are allowed to secure meter covers.

3) The panel shall have permanent barriers to isolate the customer's disconnect switch and

wiring from the metering areas.

4) Each line-side compartment shall have provisions for a Cooperative seal, whether or not the compartment is designed to house a meter.

5) No multiple metering panels shall have a door that completely encloses the utility metering.

Additional Requirements for Combination Metering Devices:

1) Combination metering devices, such as meter/main and meter/panel, shall be constructed from steel or aluminum. Devices constructed from non-metallic materials are not allowed.

2) Combination metering devices, excluding side-wired type which are bussed on the line side of the meter, used in underground installations shall have the following minimum dimensions in the metering section:

   a) 200 amp - 9 ½" height x 13" width (height measured from top of enclosure to center of meter block).

   b) 320 amp - 13 ¼" height x 13" width (height measured from top of enclosure to center of meter block).

3) Combination metering devices shall have permanent barriers to isolate the customer's disconnect switch and wiring area from the metering area.

4) Combination metering devices shall have separate covers on the customer's disconnect switch and wiring area and on the metering area.

Additional Requirements for Metering Pedestals:

1) Metering pedestals shall be constructed from steel or aluminum. Pedestals constructed from non-metallic materials are not allowed.

2) Pedestals shall be furnished, installed, and maintained by the customer.

3) Pedestals shall meet Cooperative and applicable code requirements.

4) Pedestals shall be adequately supported to maintain the vertical alignment of the meter in a level and plumb position throughout the life of the installation.

5) Metering pedestals with factory installed disconnecting means, shall have permanent barriers to isolate the customer's disconnect switch and wiring area from the metering area.

6) Metering pedestals shall have separate covers on the customer’s disconnect switch, wiring area and on the metering area.

7) Customer owned equipment other than service conductors, shall not be installed in the space dedicated to the utility metering compartment.

8) Sockets shall have ringless style covers. No screws, studs or wing nuts are allowed to secure the meter socket covers.

9) Pedestals shall meet additional requirements shown in the Guideline Drawings UM8-3 & UM8-3A**.**

4.13.2. Instrument Transformer Meter Sockets

The Cooperative will furnish instrument transformer meter sockets. The Cooperative shall be contacted first to determine the rate, load and service voltage. The customer should contact the Cooperative to obtain metering equipment and to coordinate meter installation.

4.14. METER LOCATION AND INSTALLATION

4.14.1. Meter Location

The customer shall provide and maintain, without cost to the Cooperative, an easily accessible metering location. The Cooperative will locate an acceptable point of delivery and meter location. No wiring dependent upon a meter location shall be started until a definite meter location has been established. The Cooperative will not be responsible for the relocation of the service attachment, service entrance, or metering equipment resulting from an improper location chosen by the customer, which does not meet the requirements of the Cooperative.

Residential self-contained and transformer-rated meters (including CT enclosures) shall be installed outdoors. Residential meters originally installed outdoors that, due to alterations or additions to the residence, become enclosed within the building structure (e.g. enclosed patio or garage), where access through a doorway is required, shall be relocated to an outdoor location designated by the Cooperative.

The relocated service entrance installation shall conform to current Cooperative standards.

Commercial or Industrial self-contained and transformer-rated meter installations (including CT enclosures) shall be installed outdoors.

Multiple Residential/Commercial metering should be installed outdoors.

Multiple indoor metering will not be allowed unless it is not possible to install the meters outdoors, **and will require prior written approval from the Cooperative.**

If approved, indoor meter installations shall meet the following requirements:

1) The customer shall provide Cooperative personnel access to the building and meter room(s) at all times for reading, testing and other maintenance and/or safety purposes.
2) Meters shall be grouped together in a common room or other suitable space with direct access from outside the building (or common area).
3) The customer must provide a suitable keyless entry for Cooperative access. Customer shall provide the Cooperative with the keyless-entry code (or key code) prior to energizing the service.
4) Customer may be required to provide phone lines for meter reading purposes if the building is not readily accessible at all times.
5) The space in front of all metering equipment must be a minimum of 3 feet or as code requires.

Mobile homes, construction trailers, and those buildings not intended as dwelling units, such as, but not limited to, contractor's onsite offices, sales offices, mobile studios, mobile stores, or construction job dormitories intended for sleeping purposes only, shall have the meter socket located adjacent to and in line of sight of the structure it supplies. The meter socket shall not be mounted on or attached to the structure. Refer to 2014 *National Electrical Code®* Article 550.32(A), or as may be amended.

Manufactured homes may have the meter socket attached to the structure provided the structure meets the definition of a Manufactured Home as defined in 2014 *National Electrical Code®* Article 550.2, or as may be amended, and meets the requirements of 2014 *National Electrical Code®* Article 550.32(B), or as may be amended. The manufactured home shall be installed on and secured to a permanent foundation and shall provide the necessary structural support for the meter socket attachment.

Meters originally installed in accessible locations satisfactory to the Cooperative, which become inaccessible by virtue of alterations or new construction, shall be reinstalled at a point designated by the Cooperative at the expense of the property owner.

Meters shall be installed:

1) In a location that will be easily accessible to Cooperative personnel at all reasonable hours for reading and maintenance.

2) In a location where they will be safe from damage.

Meters shall not be installed:

1) On fences, mobile homes or construction trailers.

2) Where the meter will, in the Cooperative's opinion, interfere with traffic on sidewalks, driveways, hallways or passageways.

3) Where the meter will, in the Cooperative's opinion, obstruct the opening of doors or windows.

4) In a location that may, in the Cooperative's opinion, be considered hazardous.

5) Where meter reading or servicing may, in the Cooperative's opinion, become impracticable.

4.14.2. Meter Installation

Installation of the meter socket is the responsibility of the customer. Meter sockets and associated equipment shall be mounted securely and plumb. Expansion bolts, plugs, or anchors shall be used where attachment is made to masonry, concrete, or plaster walls.

The meter socket, service mast, service riser, or any conduit containing conductors on the line side of meters shall not be covered or concealed except when necessary to pass through roof eaves or through floor structures within a building.

The customer shall provide suitable protective equipment approved by the Cooperative if a meter location puts the meter at risk of damage from any means, including falling ice or snow from roof overhangs.

All line-side unmetered conductors shall be in a continuous length of conduit from the point of delivery to the meter socket, cold sequence disconnect, or CT cabinet. No conductors other than line-side conductors shall be permitted in line-side conduits, troughs, or lug landings. Junction boxes, conduit bodies (e.g. LB's), or other devices are not allowed without specific approval from the Cooperative.

4.14.3. Meter Socket Identification

The unit number shall be plainly marked on all commercial services and all multiple residential services by a permanent durable means on both the inside and the outside of the meter socket**,** corresponding main service breaker, tenant panel board, and doorway/entrance to the tenant space. The method of identifying the corresponding unit on the meter socket is listed below:

4.14.4. Meter Socket Identification Requirements

The meter socket shall be marked with a stamped plastic, brass, aluminum, stainless steel tag, or a weather resistant plastic/vinyl sticker securely attached to the meter socket. The stamped tag or permanent plastic/vinyl sticker shall be attached to the exterior, non-removable portion of the meter socket and at the individual meter main disconnect. Any other means of identification is not acceptable. The owner is required to ensure the covers stay matched with their corresponding inside tag. If a landlord or property owner changes the addresses or identification numbers of any metered units or splits/adds additional units after this labeling process is complete, it is their responsibility to re-label the equipment and to contact the Cooperative to prevent billing & service discrepancies. All billing discrepancies as a result of not notifying the Cooperative will be billed to the responsible parties or landlord.

Note: Meters will not be installed until all units are permanently marked.

4.15. METER MOUNTING HEIGHTS

The mounting heights of meters, measured from the center of the meter to final grade or platform outdoors, or to the floor when installed indoors, are as follows:

1) Single meter sockets:

   a) Self-contained or transformer-rated ----------4'minimum to 6' maximum

   b) Meter pedestals ----------4' minimum to 6' maximum

2) Multiple meter sockets, vertically aligned:

   a) Indoor ----------3' minimum to 6'-6" maximum

   b) Outdoor ----------3' minimum to 6'-6" maximum

The height of multiple meter sockets, either horizontally or vertically aligned, shall be evenly distributed from the center point of the meter stack between the upper and lower height limitations.

If a platform is used to achieve the required mounting heights for a meter installation, it shall be permanent and accessible by a stairway. The minimum horizontal dimensions of the platform shall meet the *National Electrical Code®* requirements for working space.

4.16. METER CLEARANCES

The minimum depth of working space in front of metering equipment shall be 3', 3'-6", or 4' in accordance with 2014 National Electrical Code® Article 110.26(A)(1) and Table 110.26(A)(1), or as may be amended. The minimum width of the working space in front of metering equipment shall be the width of the metering equipment or 2'-6", whichever is greater, in accordance with 2014 National Electrical Code® Article 110.26(A)(2), or as may be amended. No customer-owned equipment may be installed directly in front of metering equipment which includes cold sequence disconnects, CT cabinets, secondary connection cabinets, switchgear CT compartments, and meter sockets.

4.16.1. Clearances from Gas Meter Sets

There shall be a 3' radial minimum clearance between the discharge/release point of the relief device line or regulator vent or connected terminal outlet piping of all gas meter sets and sources of ignition. Any discharge/release point of the relief device line or regulator vent or connected terminal outlet piping must be located outside where the gas can escape freely into the atmosphere and away from any opening into the building.

No electrical equipment shall be installed directly above a gas meter or in an area 3 feet on either side of a gas meter set.

In all cases, sufficient working space (3' preferred) in front of and on either side of the gas meter and associated piping shall allow access for inspection, reading, replacement, or necessary maintenance.

Refer to Illustrations Section, drawings UM1-G5 & UM1- G6 for clearance requirements.

4.17. COLD SEQUENCE METERING (for multiphase self-contained metering)

Cold Sequence Requirements

A cold sequence disconnect shall be furnished, owned, installed, and maintained by the customer upon Cooperative Approval.

The cold sequence disconnect shall be installed on the same wall, on the line side of, and within 24" of the meter.

The cold sequence disconnect shall contain provisions for a Cooperative wire seal for the cover and a Cooperative padlock in the operating handle lock-off position. Wire seals will be used by the Cooperative to secure the enclosure from unauthorized entry and will allow the customer emergency access to reset breakers or to replace fuses. A Cooperative padlock will only be used to lock disconnects in the off position for services that are shut off.

The cold sequence disconnect shall not be operated by the customer except for emergency conditions. For seasonal loads or service discontinuance, the cold sequence disconnect shall not be operated in an off position in lieu of a service disconnection by the Cooperative. Customers requiring a service to be discontinued shall contact the Builders Call Line.

> *Note: All Cooperative-owned meters shall stay energized up to the line side terminals of the meter socket, in order to obtain information concerning connected load, to measure or test service, to read meters, or for other purposes incidental to the supplying of electric service.*

The amp rating of the cold sequence disconnect shall not exceed the amp rating of the meter socket and shall be installed in accordance with 2014 National Electric Code® Article 230, or as may be amended.

Tables VII through IX in Section 5 can be used to determine if the available fault current at a single-phase electric meter socket is less than 10,000 amperes based on a specific transformer size and service conductor size and length.

4.18. HOT SEQUENCE METERING

4.18.1. Residential

Residential self-contained meter installations, both single-phase and three-phase, shall be hot sequence metering as the standard.

4.18.2. Commercial and Industrial

Refer to COLD SEQUENCE METERING in this section for requirements for commercial and industrial self-contained metering. Hot Sequence is the required installation method for commercial and industrial instrument transformer type (CT) metering.

Note: Cold sequence disconnects are not allowed ahead of the CT cabinet without written Cooperative Approval.

SECTION 5

5. TRANSFORMERS

Necessary transformers will be installed and maintained by the Cooperative in accordance with its established Rate Schedules, Electric Service Connection Policy, and Line Extension Policy.

The Cooperative will not furnish transformers unless they are of standard size and voltage as established by the Cooperative for the locality where the service is rendered. The customer shall notify the Cooperative in advance of any change in the customer's load requirements that may affect the installed transformer capacity.

5.1. GROUNDING

All service systems that operate below 1000 volts contain a grounded neutral or a grounded phase conductor used as a circuit conductor in the system. The grounded neutral or grounded phase conductor is grounded at the supply transformer and will be run from the transformer bank to the meter socket and to each service disconnection means in accordance with the 2014 *National Electrical Code*® Article 250.24(B), or as may be amended.

5.2. SPECIAL RULES

When a customer furnishes transformers or other equipment, in accordance with the applicable Cooperative Rate Schedule, Policies, and Schedule of Charges, the Cooperative accepts no responsibility for maintaining or replacing the customer's transformers or other equipment if damaged or destroyed.

Cooperative Rate Schedules for primary metering installations require that the customer provide and own all equipment beyond the point of delivery. In unusual cases, the Cooperative may rent transformers, if available, to the customer in accordance with the Cooperative's Policies and Bylaws.

The customer shall provide a minimum of ten (10) feet level clearance on the door side(s) of pad-mounted transformers for hot-stick operation and ten (10) feet level clearance on the door side(s) of pad-mounted primary metering cabinets for instrument transformer maintenance. Transformers shall not be located under any overhang (roof, balcony, stairs, etc.). Clearance requirements are shown in the Illustrations Section **Drawings UM1-G3A, B, C &D; UM1-6C, UM1-8C, UM1-9C, UM1-G4.**

5.3. FAULT CURRENT

It is the intent of the Cooperative to address the customer's need for information concerning fault current and transformer protective device requirements pertaining to new construction, rewire, or additional load. Refer to the 2014 *National Electrical Code*® Article 110.9 Interrupting Rating and Article 110.16 Arc Flash Hazard Warning, or as may be amended.

Tables at the end of this Section show the available RMS symmetrical fault currents that may be expected at the secondary terminals of distribution transformers. Each fault current value listed in the tables is based on the percent impedance of a typical transformer that might be set initially or as a replacement. No primary source or secondary line impedance has been included since it is generally relatively small, may change, and cannot be accurately forecasted.

Note: Because an overloaded transformer is typically replaced by the next larger size transformer, and an under-loaded transformer may be replaced by the next smaller size transformer, the customer is encouraged to use this range of transformers to perform their studies and select equipment such as current limiting fuses, breakers and switchgear bus bar bracing.

Table VI through VIII in this Section can be used to determine if the available fault current at a single- phase electric meter socket is less than 10,000 amperes based on specific transformer size and service conductor size and length, which may allow a single-phase commercial installation to be hot sequenced. Refer to Section 4, COLD SEQUENCE METERING, Exception 3 for the exact requirements.

Due to the variability of the transformer and electric distribution system characteristics these tables are to be used as a general guideline and shall not be used as a design tool to replace engineering that may be required by the Code Authorities having jurisdiction. Customers or contractors requiring specific fault current calculations should consult a registered professional engineer of their choice.

Two types of faults are possible on a single-phase transformer having a 120/240V secondary: 1) across terminals having 120V between them, and 2) across terminals having 240V between them. While the 120V fault is higher at the transformer terminals, it attenuates more rapidly as the effect of cable impedance is added. Because of this affect, the 240V fault is often higher at the meter or CT enclosure. The following tables have been developed to aid in determining the available fault current levels at the electric meter. In addition, the tables can be used to determine the number of feet of a given size conductor between the transformer and the terminals of the meter needed to limit the available fault current to 10,000 amps.

Note 1: All residential installations served from a single-phase pad-mount transformer shall use the calculations based on the installation of a 50kVA minimum transformer.

Note 2: All temporary construction meter installations may use the actual transformer size.

5.4. ARC FLASH

It is the intent of the Cooperative to address a customer's need for information concerning arc flash data requirements as follows.

For Secondary Voltage Services the Cooperative will provide, upon request from the customer:

1. Transformer size, primary voltage, secondary voltage, and typical percent impedance

2. Transformer primary fuse information size and type.

3. Maximum available secondary symmetrical three-phase fault current, from the tables at the end of this Section.

For Primary Voltage Services (excluding network services)[4] the Cooperative will provide, upon request from the customer:

1. Calculated symmetrical bolted three-phase fault current, bolted single-line ground fault current and X/R ratio at the service point.

2. The upstream protective device information nearest the service point. This information will include the device model, rating and applicable settings.

Fault current calculations are based upon the distribution system configuration at the time of the calculations. The Cooperative does not provide minimum fault current information or associated protective device clearing times.

It is understood that this data may be used for arc flash calculations. Parties using this data must understand that it may change due to various circumstances.

The following tables in this Section are only intended to provide the basic information necessary for secondary service customers to make their own internal system fault current and arc flash calculations. Primary service customers will still need to consult with a Cooperative Engineer to obtain fault current and protective device information for their service locations.

It is highly recommended when customers are performing maintenance work on or near exposed equipment or circuit parts that their electrical system be de-energized whenever possible.

Table IA

SINGLE-PHASE OVERHEAD TRANSFORMERS					
SINGLE-PHASE FAULT CURRENT IN RMS AMPS SYMMETRICAL EXPECTED AT THE SECONDARY TERMINALS OF THE TRANSFORMER					
TR kVA	TR %R	TR %X	TR %Z	Available Fault Current 240 V Secondary	Fuse Size 15 kV
10	1	1	1.4	3,000	2
15	1	1	1.4	4,500	3
25	1	1	1.4	7,450	6
50	1	1	1.4	14,900	10
75	1	1	1.4	22,350	15
100	1	1	1.4	29,800	20
167	1	1	1.4	49,700	30

*Chance T fuses

Table IB

SINGLE-PHASE PAD MOUNTED TRANSFORMERS					
SINGLE-PHASE FAULT CURRENT IN RMS AMPS SYMMETRICAL EXPECTED AT THE SECONDARY TERMINALS OF THE TRANSFORMER.					
TR kVA	TR %R	TR %X	TR %Z	Available Fault Current 240 V Secondary	Transformer Protective Device (Bay-O-Net Fuses) 15 kV
15	1	1	1.4	4,500	3
25	1	1	1.4	7,450	8
50	1	1	1.4	14,900	15
75	1	1	1.4	22,350	15
100	1	1	1.4	29,800	25
167	1	1	1.4	49,700	50

* RTE Bayonet Type C Fuse

TABLE II

THREE-PHASE PAD MOUNTED TRANSFORMERS						
THREE-PHASE FAULT CURRENT IN RMS AMPS SYMMETRICAL EXPECTED AT THE SECONDARY TERMINALS OF THE TRANSFORMER						
						Transformer Protective Device
TR	TR	TR	TR	Fault Current	Fault Current	15 kV
kVA	%R	%X	%Z	120/208 V Secondary	277/480 V Secondary	
45	0.83	1.0	1.3	9,650	4,200	3
75	1	1.11	1.5	13,900	6,050	8
150	1	1.73	2.0	20,850	9,050	15
300	1	2.0	2.25	37,050	16,050	25
500	1	2.0	2.25	61,750	26,750	50
750	1	3.5	3.6	57,900	25,100	65
1000	0.86	4.7	4.75	58,500	25,350	100
1500	0.86	4.7	4.75	87,750	38,000	100
2000	0.86	4.7	4.75	--	50,700	**
2500	0.65	4.7	4.75	--	63,350	**

RTE Bayonet Type C Fuse

** For sizes 2000 kVA and Above, fuse size will be provided by Engineering on a case by case basis

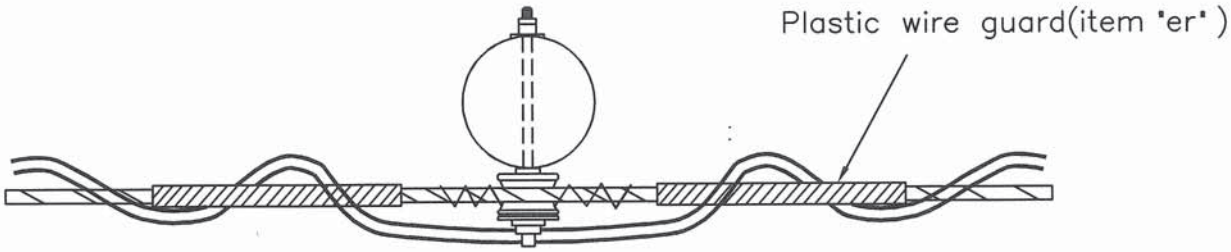

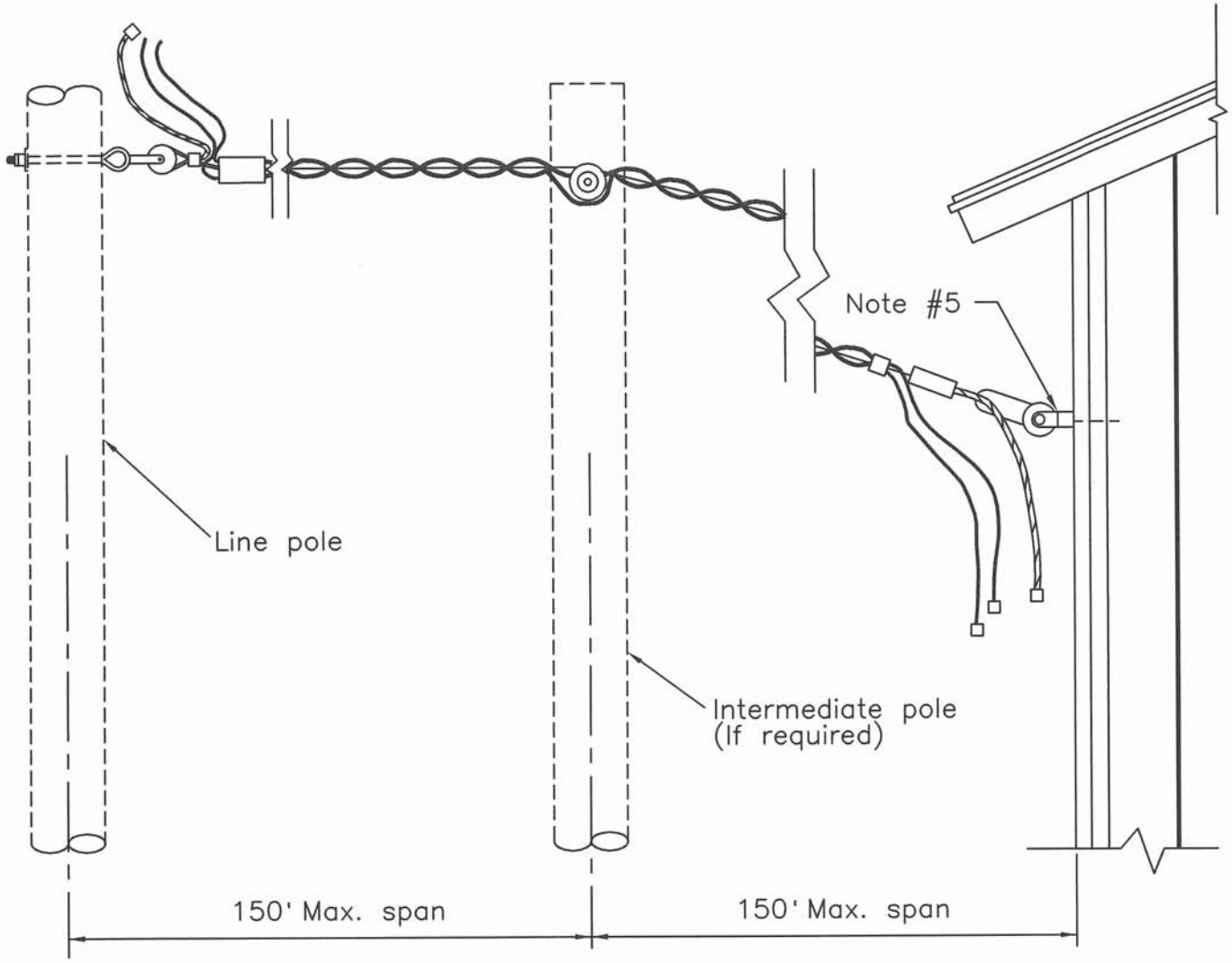

NOTES:

1. Services as short as possible are preferred.
2. See NESC Table 232–1 for minimum ground clearances.
3. Refer to secondary and service assemblies for construction details.
4. Service connectors to be insulated compression type.
5. Confirm house attachment point is properly supported.

No.	Description	Engr	Appd	Date

CABLE SERVICE ASSEMBLY GUIDE

Wright-Hennepin Cooperative Electric Association
A Touchstone Energy Cooperative

12.47/7.2 KV
June 1, 2013

Engr Tech: Engr: Approved: Date: 4-12-13

K4.1G
(M24)

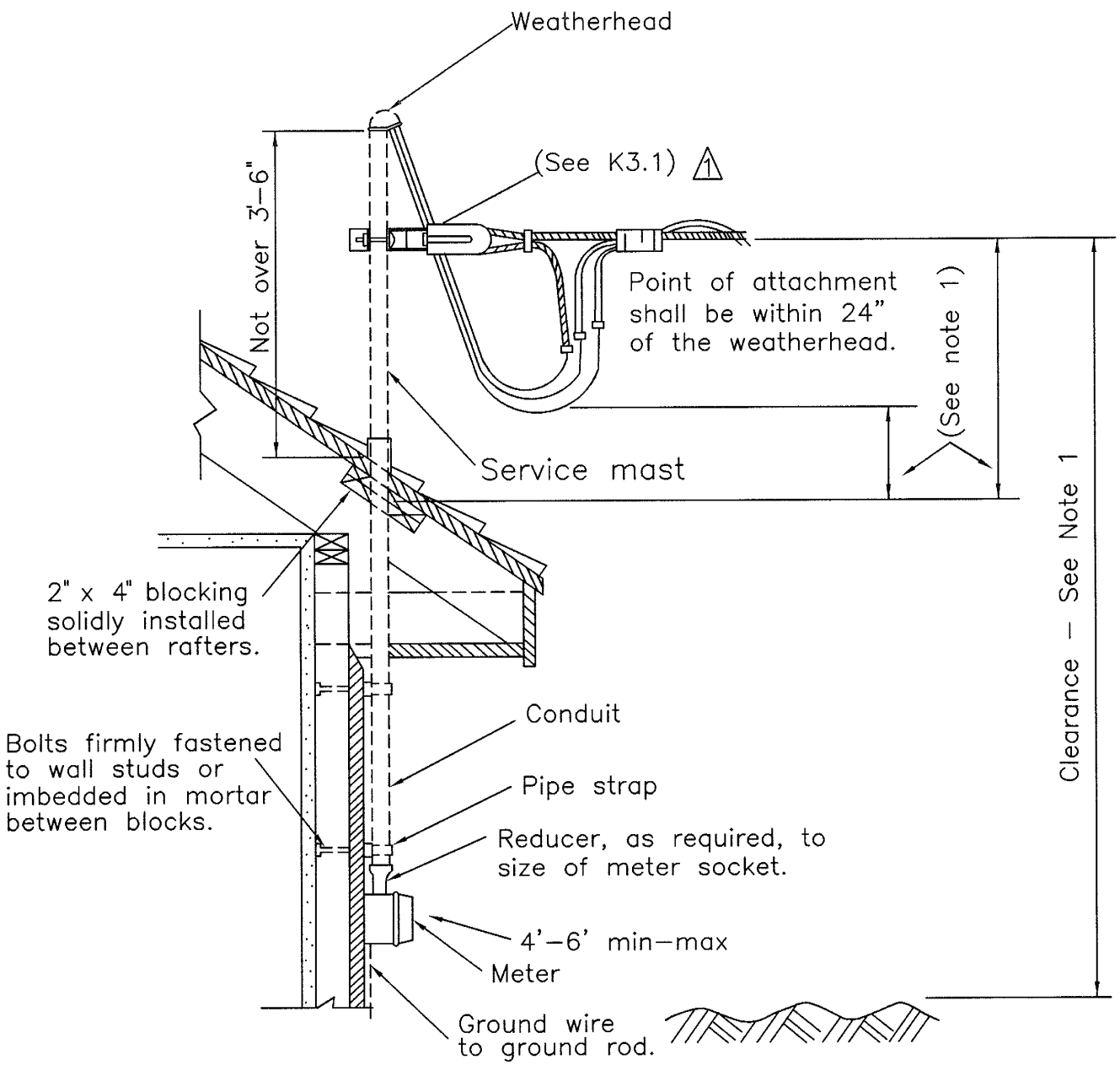

NOTES:

1. All clearances to be in conformance to the most stringent requirements of the NESC, NEC or other codes of governmental or regulating authorities as applicable.
2. 1 If length of conduit exceeds 10 feet, coupling is permitted but shall not be installed above the roof line.
3. On new mast install, electric service only. CATV or Phone not allowed.

No.	Description	Engr	Appd	Date
1	Change to K3.1, Notes			5/22/15

MAST TYPE SERVICE ASSEMBLY GUIDE

Wright-Hennepin Cooperative Electric Association
A Touchstone Energy Cooperative

12.47/7.2 KV
June 1, 2013

Engr Tech: Engr: Approved: Date:

K4.2G
(M24-10)

Temporary Overhead Service

The installation shall be outside utility easement and no closer than 10 feet or more than 75 feet from WH's secondary supply point.

Temporary service installations subject to cold sequence requirements.

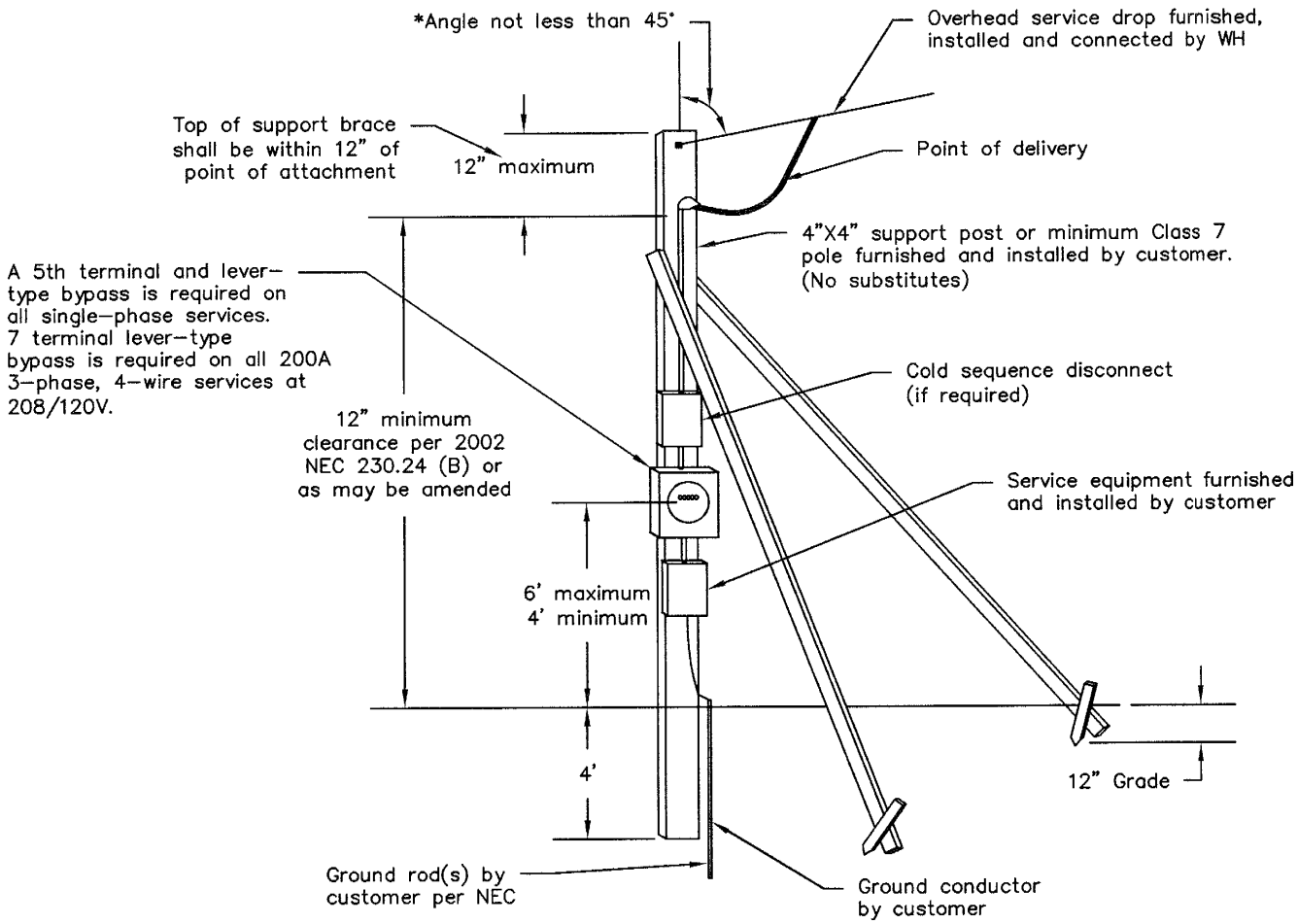

Service address shall be prominently displayed on temporary service installation

Vertical Clearance from Ground:

- 12' minimum clearance from ground (except as below).
- 18' over public streets, alleys, roads, parking areas subject to truck traffic, driveways on other then residential property, and other land such as cultivated, grazing, forest and orchard.

-Temporary installation shall not be attached to a WH pole
-Support may require additional braces to be protected from vehicular and other construction hazards.
-Make sure area is clear of underground obstructions before installing support or ground rod.
-A CT connection is required on all 3-phase connection greater than 208V or 200A and all single-phase connect cabinets greater than 320A.

*Service drop shall not be at an angle of less than 45° from vertical and not closer than 10' horizontal.

No.	Description	Engr	Appd	Date

Wright-Hennepin Cooperative Electric Association
A Touchstone Energy Cooperative

TEMPORARY SERVICE INSTALLATION FROM AN OVERHEAD SECONDARY SUPPLY

12.47/7.2 KV
MAY 2015

Engr. Tech: Engr: Approved: Date: 5/22/15

K4.3G

METER ICE AND SNOW SHIELD

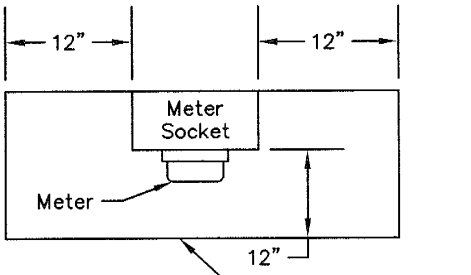

Top View

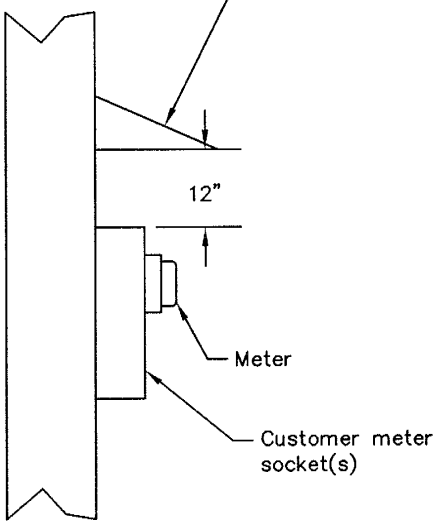

Wall Section

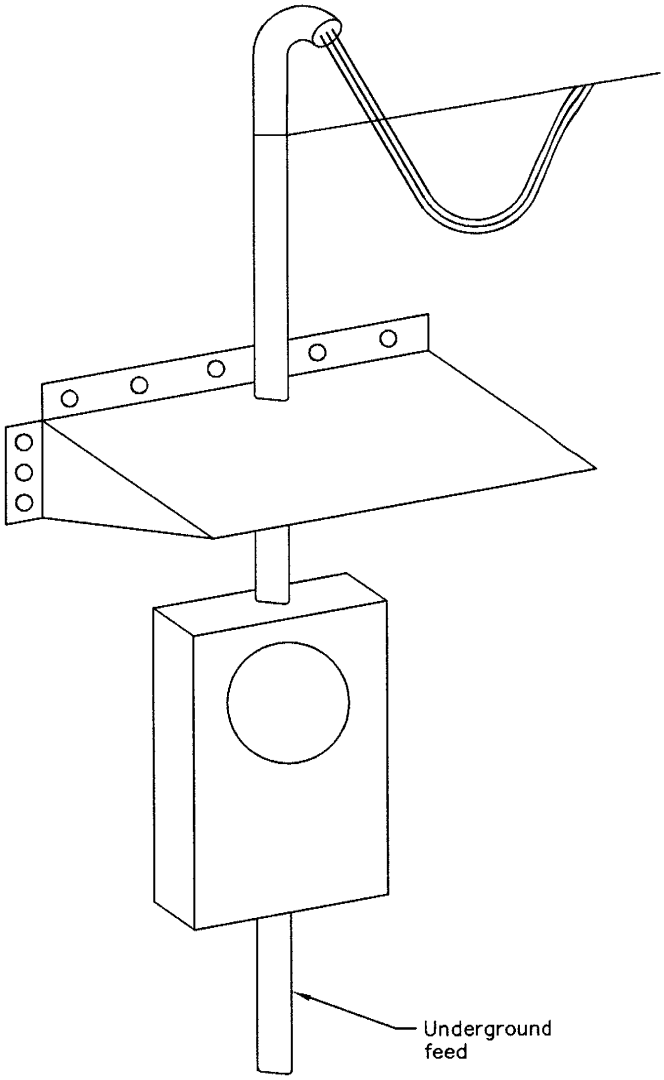

Front View

- Shield must be capable of protecting meter.
- Shield shall be primed and painted with rust resistant paint.
- Meter socket must have minimum 12" clearance from shield in all directions.
- Check with Cooperative to determine if ice and snow shield is required.

No.	Description	Engr	Appd	Date

METER ICE AND SNOW SHIELD

Wright-Hennepin Cooperative Electric Association
A Touchstone Energy Cooperative

12.47/7.2 KV
MAY 2015

Engr-Tech: ERO | Engr: | Approved: | Date: 5/28/15

K4.4G

SERVICE DROP CLEARANCE REQUIREMENTS OVER OTHER STRUCTURES
AT MAXIMUM SAG OF WIRE DESIGN

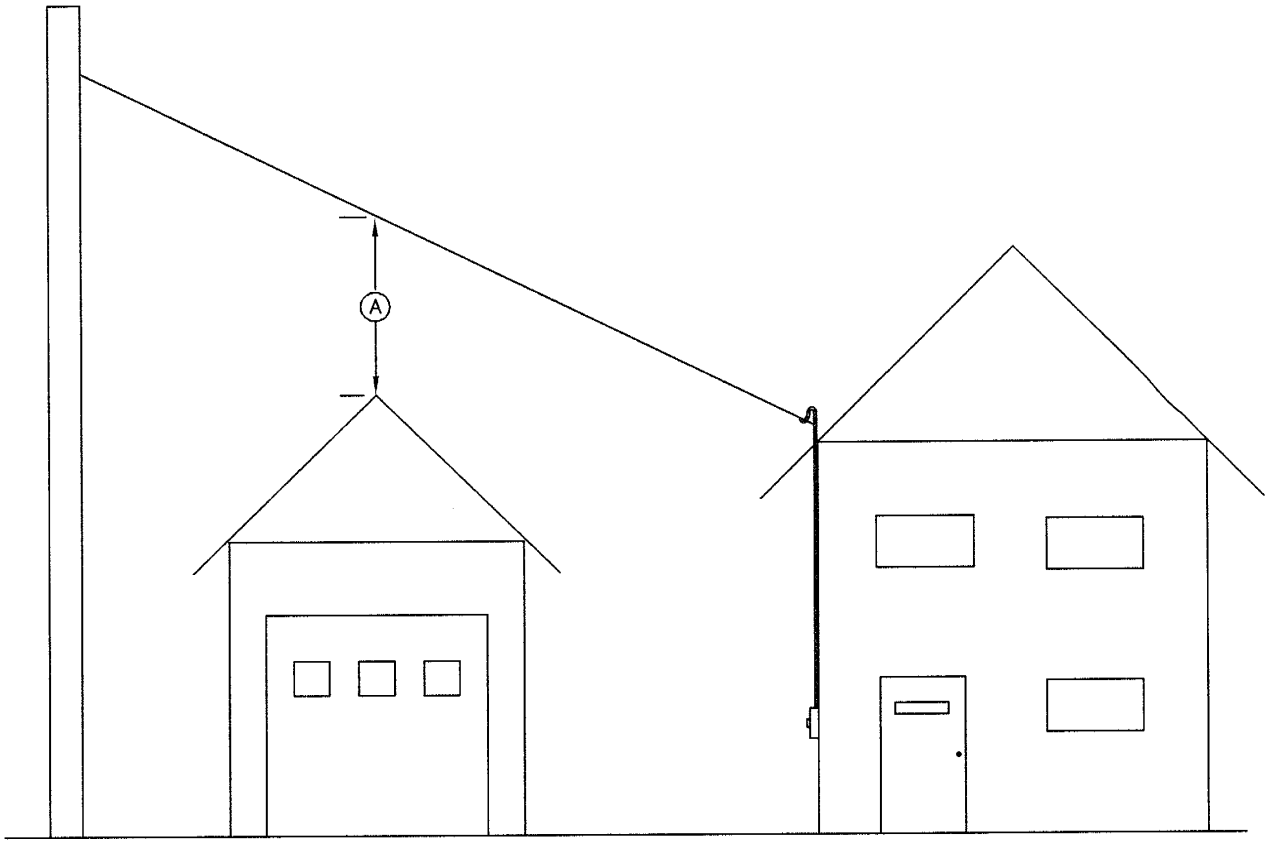

(A) –11 feet required above roof of other structures readily accessible to pedestrians.
–3.5 feet required above roof of other structures not readily accessible to pedestrians.

No.	Description	Engr	Appd	Date

SERVICE DROP CLEARANCE REQUIREMENTS

Wright-Hennepin Cooperative Electric Association
A Touchstone Energy® Cooperative

12.47/7.2 KV
MAY 2015

Engr. Tech: Engr: Approved: Date: 5/28/15

K4.5G

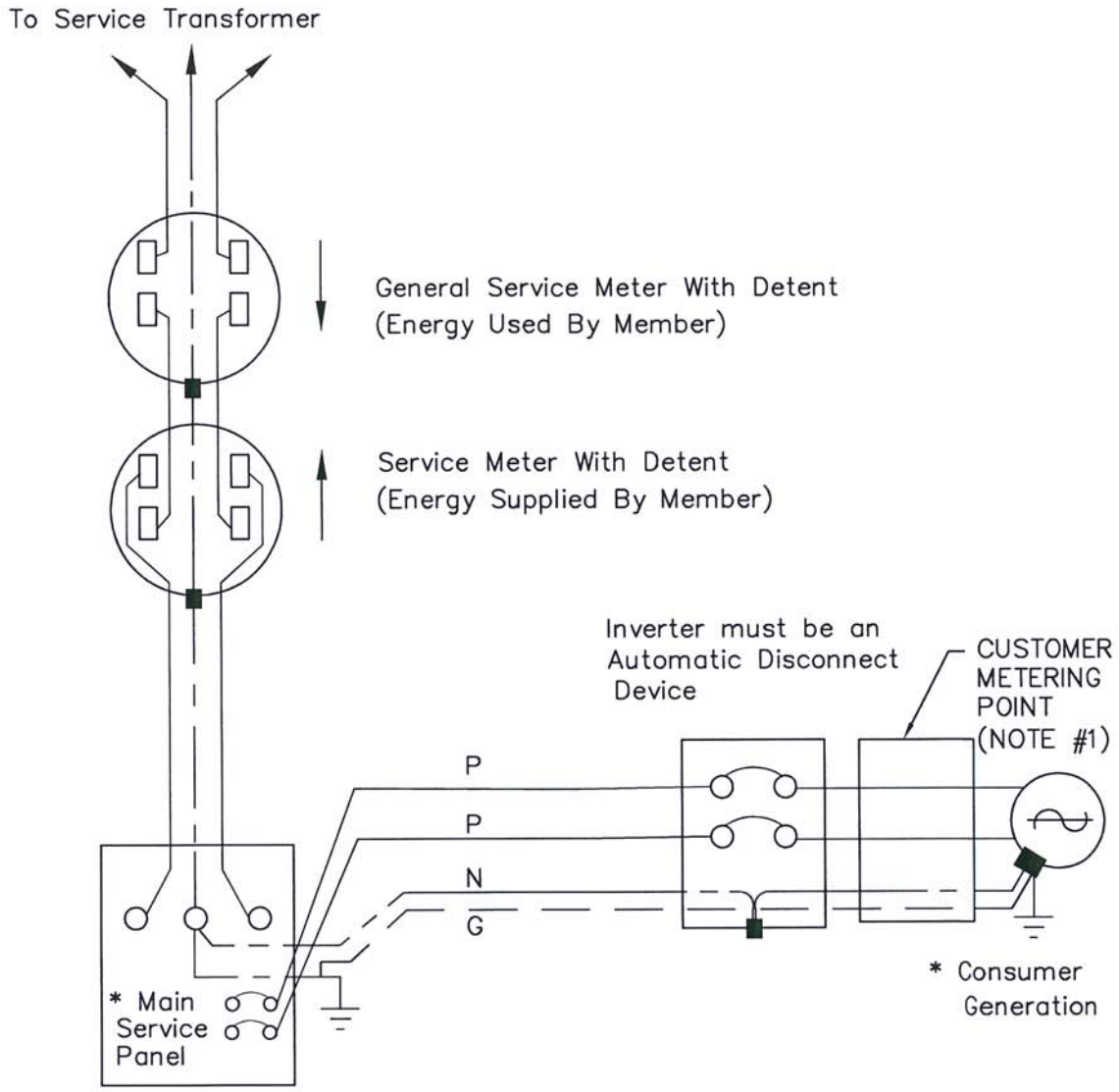

* Consumer owned equipment, subject to Cooperative's Rules and Regulations, NEC, NESC and Minnesota State Board of Electricity approval.

All meters owned by Cooperative.

NOTES:

1. "Optional" customer metering point. Customer pay W–H to install the meter and socket (can be installed by owner).

No.	Description	Engr	Appd	Date

NET METERING GUIDE

Wright-Hennepin Cooperative Electric Association

12.47/7.2 KV
JUNE 1, 2013

Engr Tech: Engr: Approved: Date: 10/28/13

Q2.3G

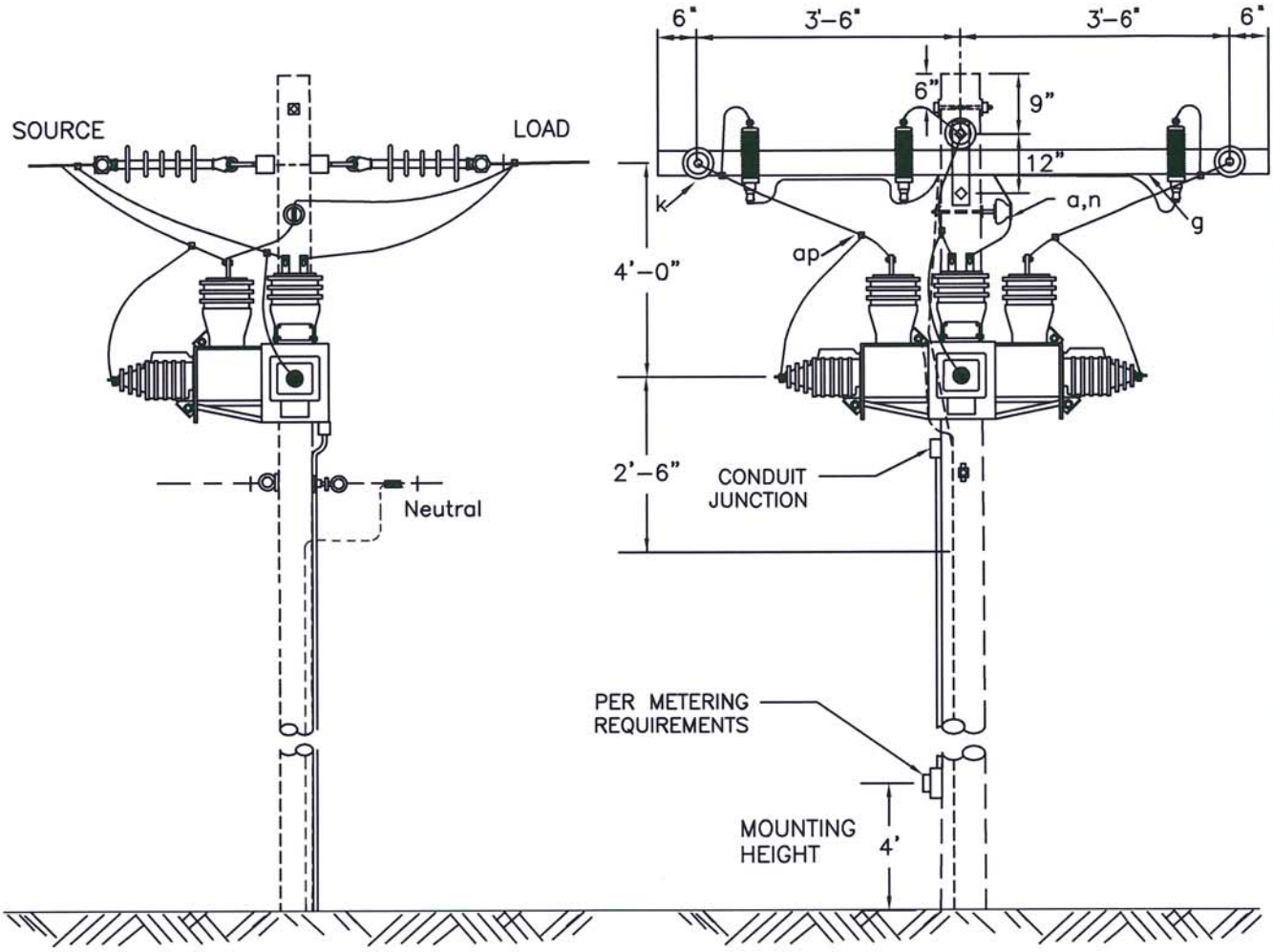

STOCK NO	ITEM	MATERIAL	QTY
34223000	a	Insulator, regular, pin	1
6380500	c	Bolt, machine, 5/8" x req'd length	2
71030000	d	Washer, square, 3"	15
18182131	g	Crossarm Fiberglass Tangent, 8'	2
34280040	k	Insulator, epoxy	6
11720000	l	Clamp, conduc, dead end, all	8
6330500	n	Bolt, double arm, 5/8" x req'd length	4
6361500	o	Bolt, eye, oval, 5/8" or 3/4"	2
42901063	aa	Nut, oval eye, 5/8" or 3/4"	6
1521002	ae	Arrester, surge (10kV)	3
17410000	ap	Connector, hot line clamp	3
	ek	Locknuts	14
		Jumper pin	1

NOTES:

1. For neutral ground assembly, see drawing H1.1.

No.	Description	Engr	Appd	Date

PRIMARY METERING INSTALLATION (THREE-PHASE)

Wright-Hennepin Cooperative Electric Association
A Touchstone Energy Cooperative

12.47/7.2 KV
JUNE 1, 2013

Engr Tech: EKO | Engr: | Approved: | Date: 10/28/13

Q4.2

FORM 3S

OFF PEAK ONLY

CT METERING

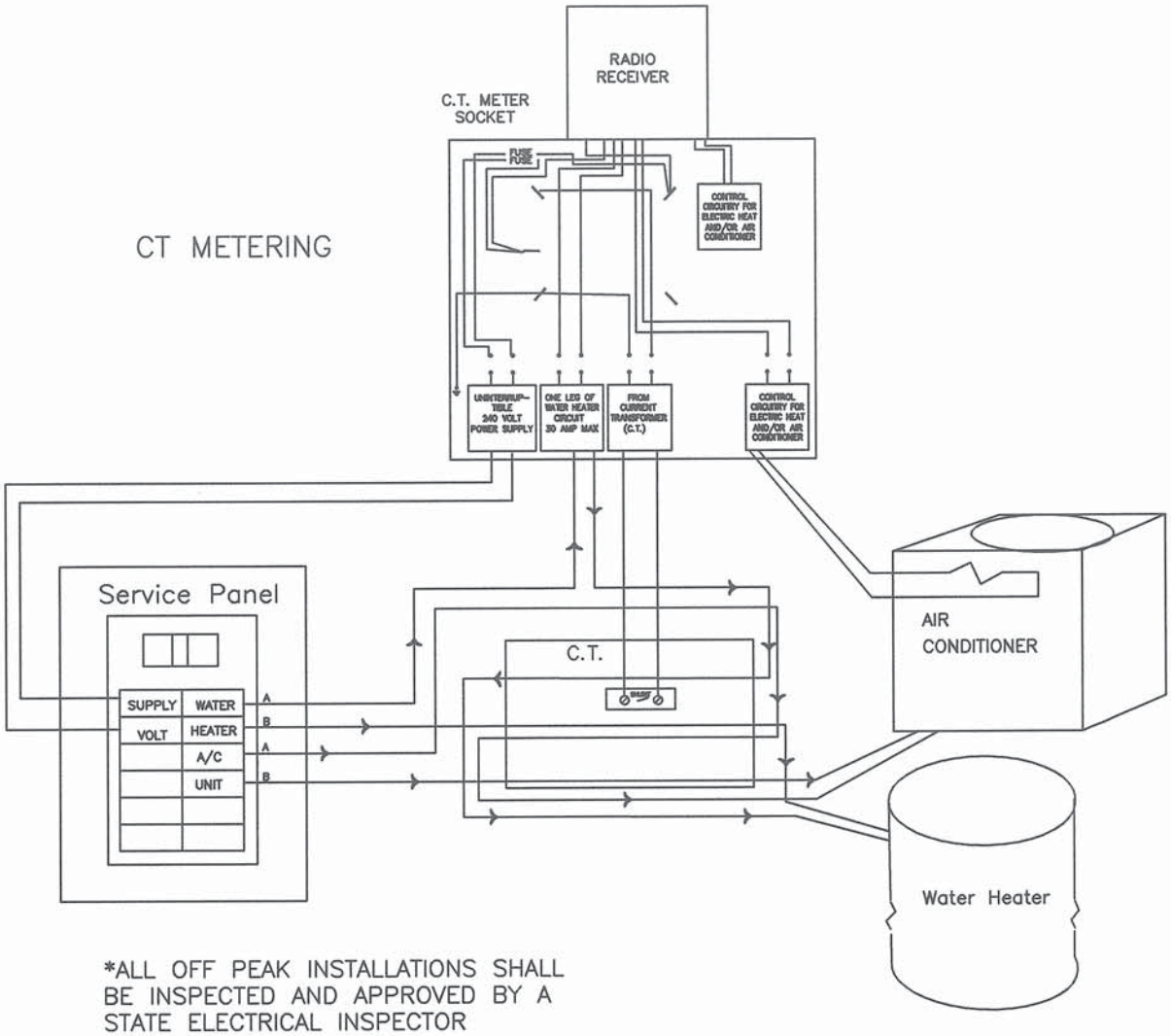

*ALL OFF PEAK INSTALLATIONS SHALL BE INSPECTED AND APPROVED BY A STATE ELECTRICAL INSPECTOR

	CT SIZE	METER Rr	BILLING MULTIPLIER
MECHANICAL	200 : 5	8 1/3	1

	CT SIZE	METER MULT.	BILLING MULTIPLIER
ELECTRONIC	200 : 5	20	1

ASSEMBLY	SERVICE SIZE
UM8.6.2–240	400 – 800 AMP

STOCK NO	ITEM	MATERIAL	QTY
3700138		3S AMR, Class 20	1
69112121		CT 200:5, RF4, Bar Type	2

No.	Description	Engr	Appd	Date

SINGLE PHASE 120/240 VOLT SERVICE
1 CT – 3 WIRE

Wright-Hennepin Cooperative Electric Association
A Touchstone Energy Cooperative

MAY 2015

Engr Tech: Engr: Approved: Date: 5/22/15

3S–1
(UM8.6.2–240)

FORM 16S

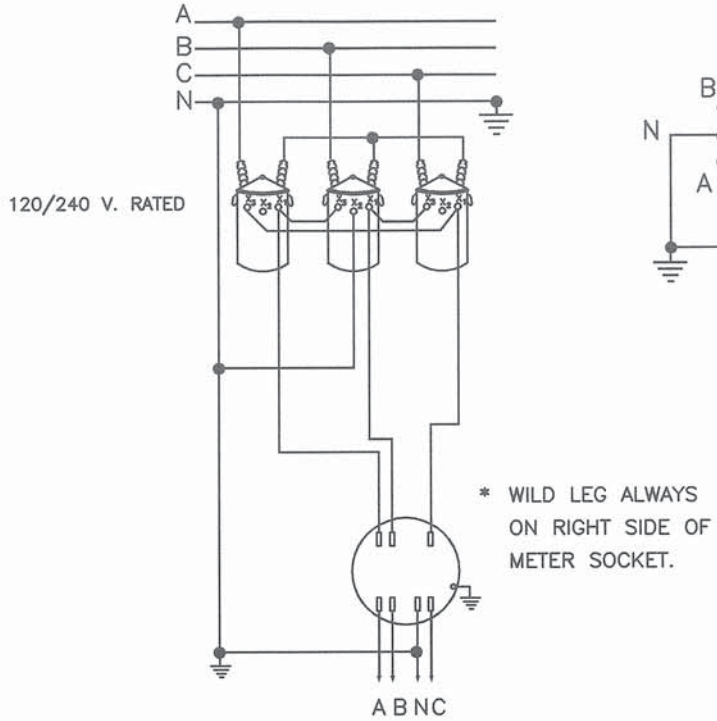

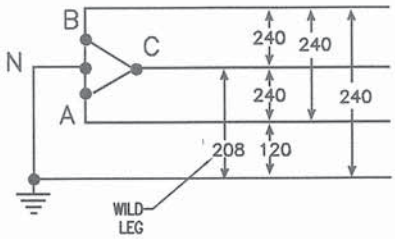

* WILD LEG ALWAYS ON RIGHT SIDE OF METER SOCKET.

7 TERM. SOCKET

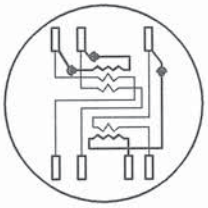

200 A SERVICE ONLY

ASSEMBLY	SERVICE SIZE
UM8.7–208Y	200 AMP OR LESS

STOCK NO	ITEM	MATERIAL	QTY
3700143		16S AMR, Class 200, 3–Ph Meter	1

No.	Description	Engr	Appd	Date

THREE PHASE 120/240 VOLT SERVICE
4 WIRE DELTA

Wright-Hennepin Cooperative Electric Association
A Touchstone Energy Cooperative

MAY 2015

Engr. Tech: Engr: Approved: Date: 5/28/15

16S–3
(UM8.7–208Y)

Point of delivery on overhead service is at the point where the customers service conductors meet WH's service drop.

Point of delivery on underground service is at the line side terminals of the CT's on residential service and at WH's facilities on commercial service.

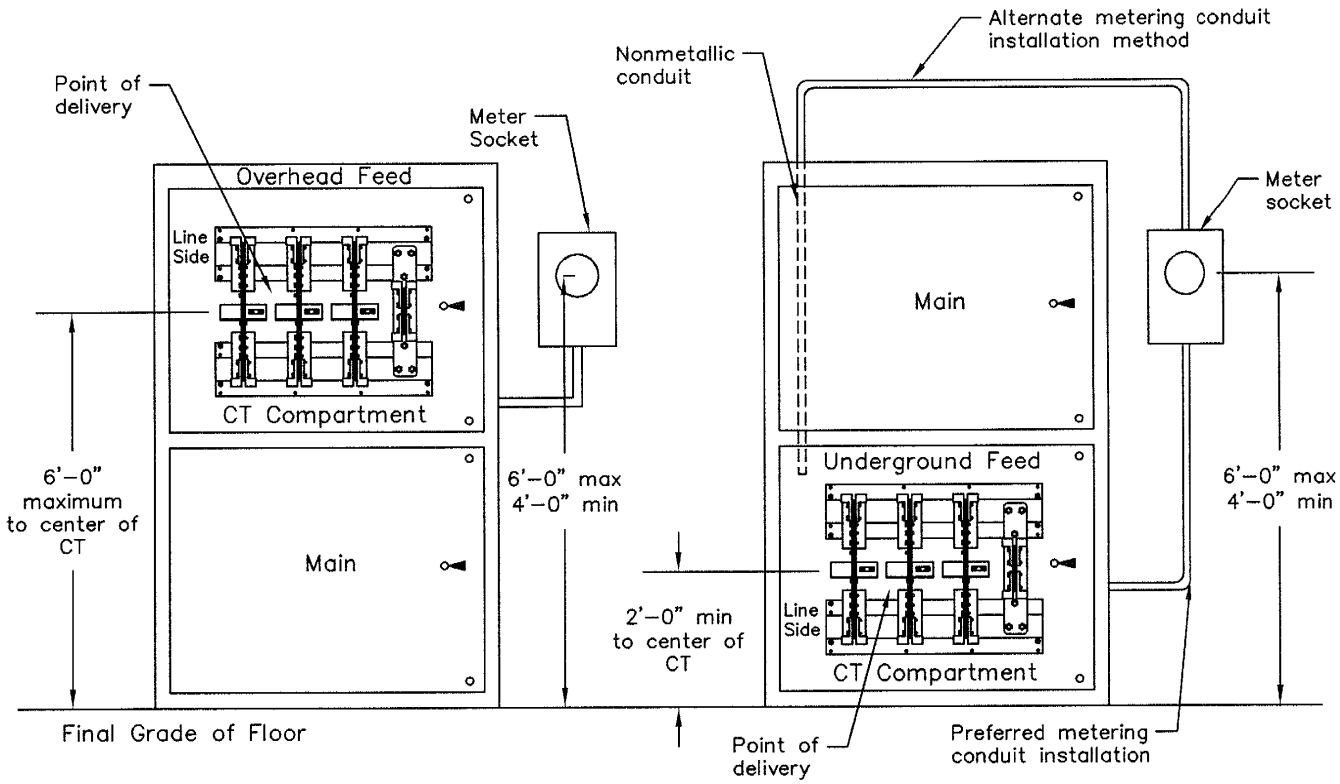

SEE FIGURE M2 FOR CURRENT TRANSFORMER MOUNTING REQUIREMENTS

–All cabinets shall be UL approved.
–Center conduits under/over terminations.
–CT compartment shall be locked separately.
–Nonmetallic conduit shall extend into CT compartment.
–Enclosure doors shall have provisions for a WH padlock with a 5/16" diameter shackle and shall be hinged on the right or left side only.

*At 480VAC delivery point shall be worked on in a de–energized state per Arc–Flash Rules.

No.	Description	Engr	Appd	Date

TYPICAL ARRANGEMENTS FOR SWITCHGEAR INSTALLATION

Wright-Hennepin Cooperative Electric Association
A Touchstone Energy Cooperative

12.47/7.2 KV
MAY 2015

Engr Tech: Engr: Approved: Date: 5/28/15

FIGURE M1

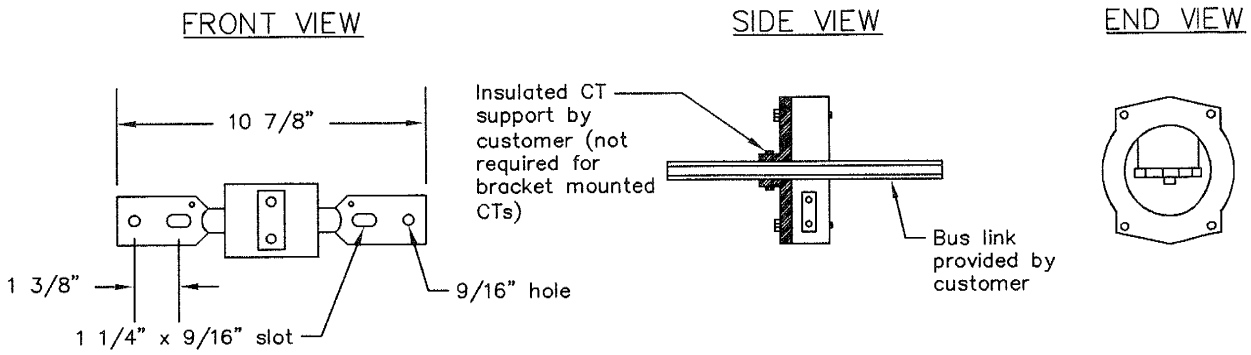

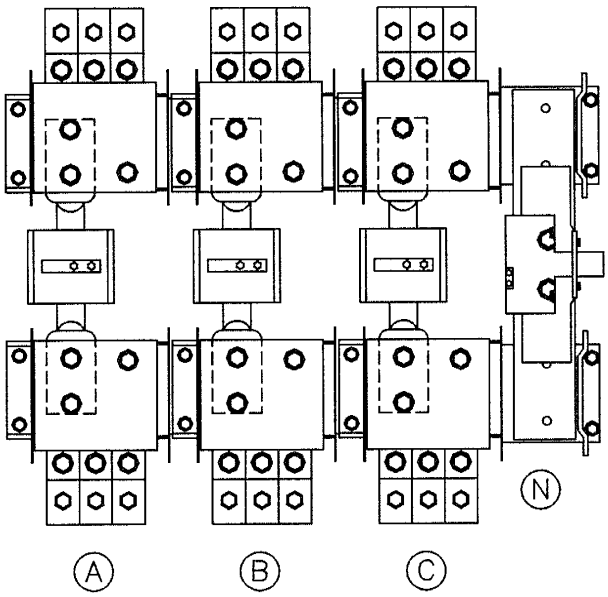

For services 800 amps and below

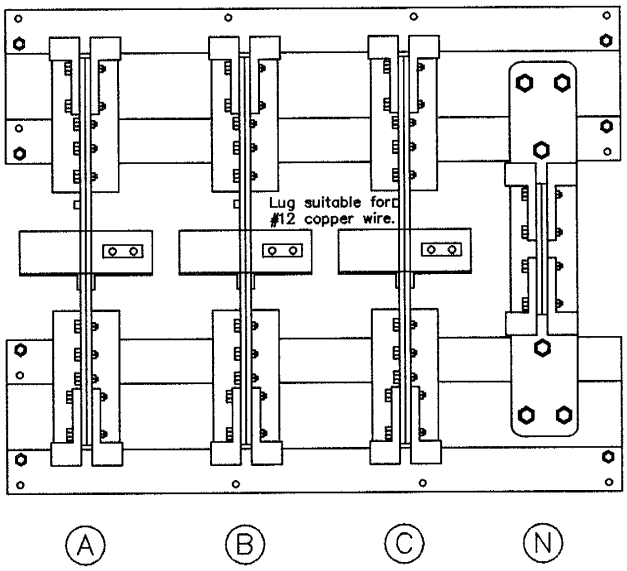

For services 1000–4000 amps

–White dot on CT is polarity mark and faces line–side.
–Enclosure door shall have provisions for a standard WH padlock with a 5/16" diameter shackle and shall be hinged on the right or left side only.
–Phasing shall be A,B,C front to back, top to bottom or left to right when viewing from front.

No.	Description	Engr	Appd	Date

CURRENT TRANSFORMER MOUNTING REQUIREMENTS FOR CABINETS AND SWITCHGEAR

Wright-Hennepin Cooperative Electric Association
A Touchstone Energy Cooperative

12.47/7.2 KV
MAY 2015

Engr Tech: | Engr: | Approved: | Date: 5/28/15

FIGURE M2

Services from 320–800 amps

UNDERGROUND

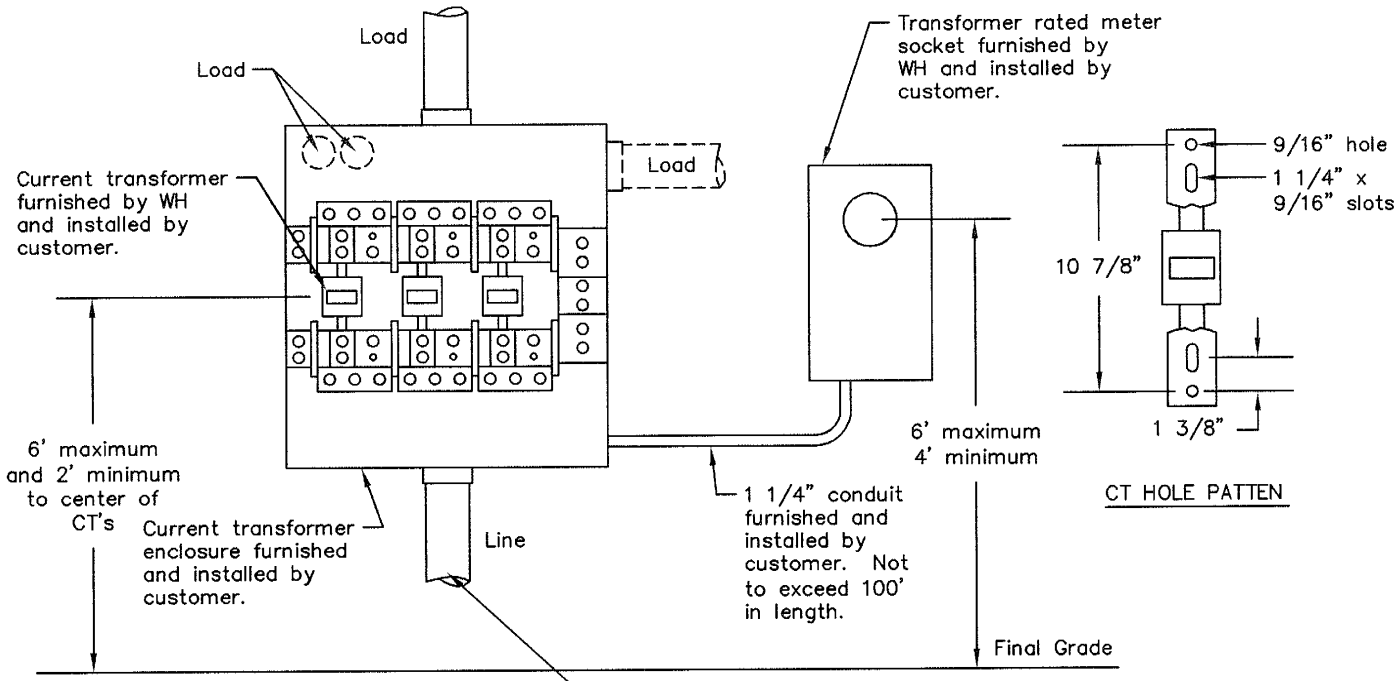

OVERHEAD

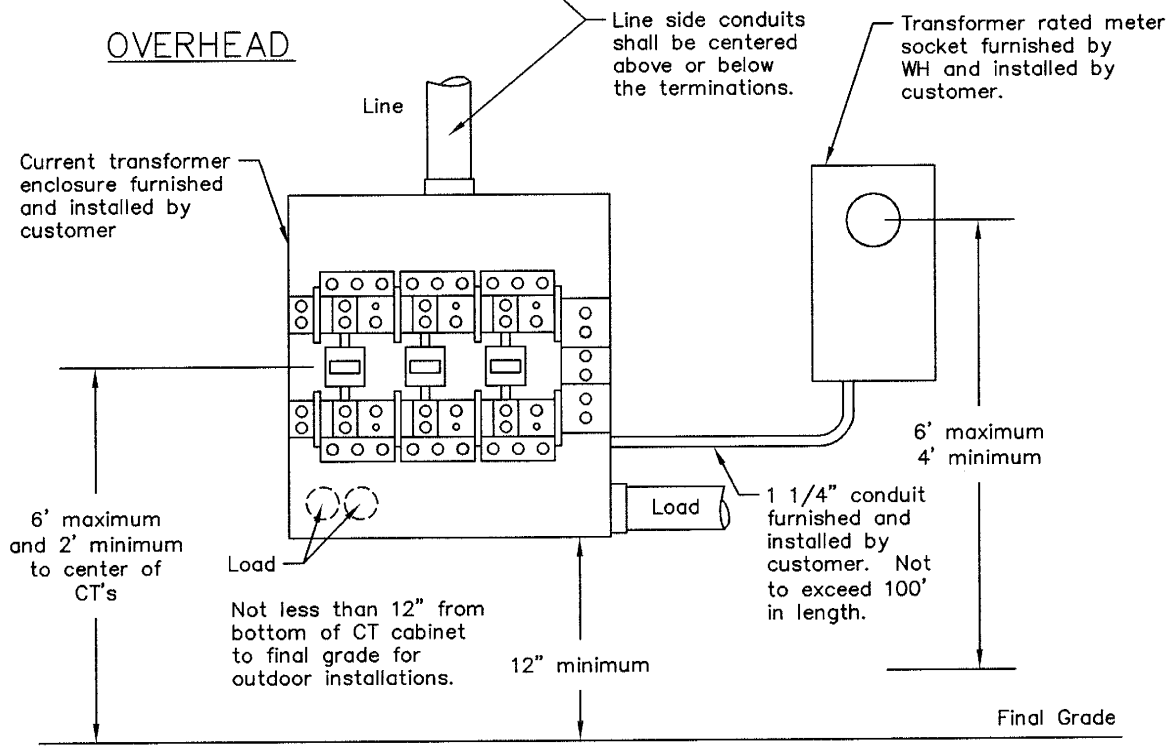

- White dot on CT is polarity mark and must face line–side.
- Service conductors are not allowed to cross in front of CTs.
- See Section 4 for instrument transformer type, installation details and requirements.

No.	Description	Engr	Appd	Date

WALL–MOUNTED CURRENT TRANSFORMER ENCLOSURES

Wright-Hennepin Cooperative Electric Association
A Touchstone Energy Cooperative

12.47/7.2 KV
MAY 2015

Engr. Tech: Engr: Approved: Date: 5/22/15

FIGURE M3

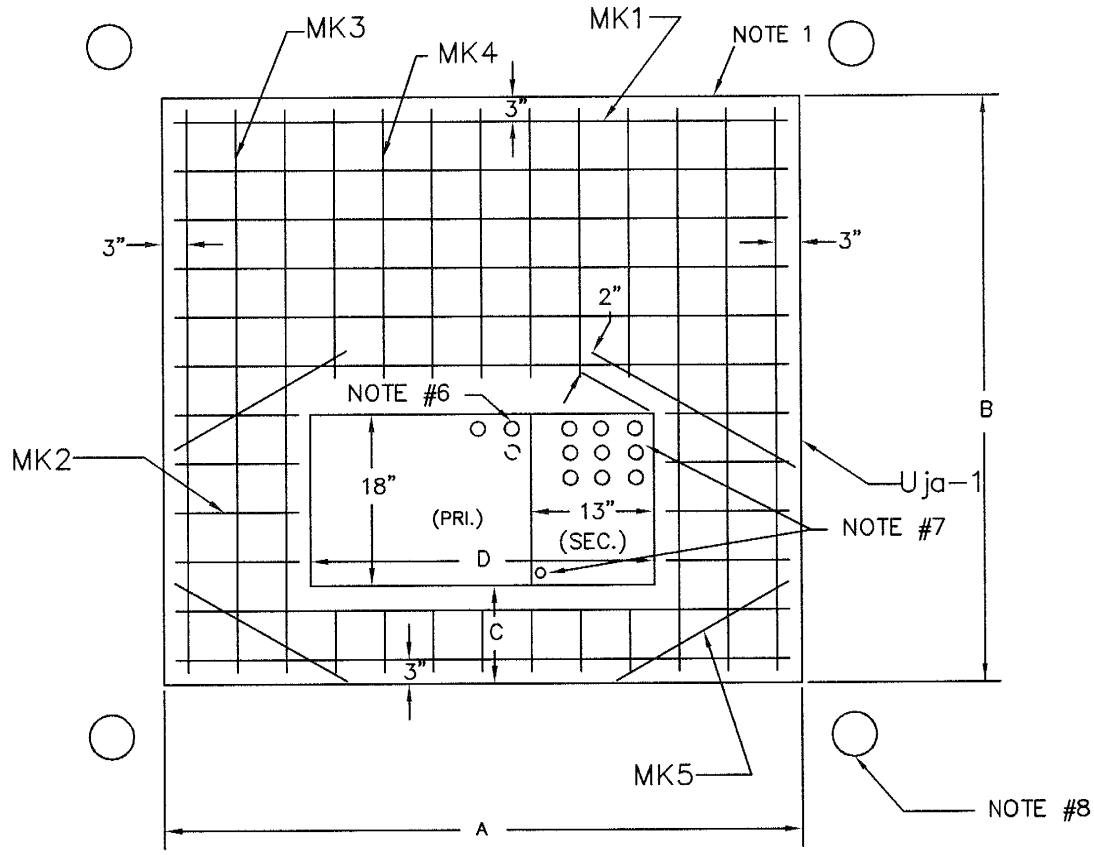

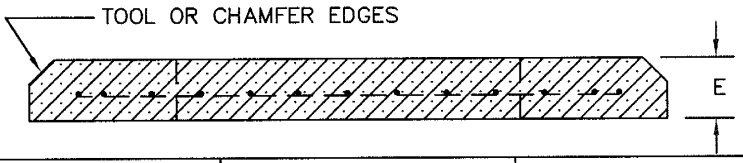

PAD	3-PHASE TRANSF. kVA	DIMENSIONS IN INCHES					REINFORCING BARS				
		A	B	C	D	E	MK1	MK2	MK3	MK4	MK5
#1	75, 112 1/2, 150, 225, 300, 500	76	62	10	△1 54	6	7 #4 70"	4 #4 10"	6 #4 57"	6 #4 28"	4 #4 26"
#2	750, 1000 1500, 2500	104	100	10	54	8	12 #4 98"	6 #4 19"	6 #4 94"	7 #4 66"	4 #4 29"

NOTES:

1. CONCRETE TESTING, 3000 POUNDS MIN. PER SQUARE INCH; 4% TO 6% ENTRAINED AIR, 3/4" MAXIMUM SIZE AGGREGATE.
2. REINFORCING STEEL, ATSM-A615 GRADE 60, PLACE APPROX. 6" O.C. EACH WAY AND SECURELY TIED TOGETHER.
3. MINIMUM CONCRETE COVER OVER REINFORCING STEEL 2 INCHES UNLESS NOTED.
4. WOOD FLOAT FINISH, LEAVING NO DEPRESSIONS.
5. LOCATE CONDUITS FOR SECONDARY CABLES AS CLOSE TO RIGHT EDGE OF OPENING AS POSSIBLE.
6. EXTEND (2) – 5" CONDUITS ON THE PRIMARY SIDE 1' BEYOND TRANSFORMER PAD, PARKING LOT, ROADWAY & CURBS TO GREEN AREA AS DIRECTED BY W.H.E.
7. 3/4" CONDUIT REQUIRED FOR CONNECTION CABINET GROUND. (4) – 6" CONDUIT FOR SECONDARY TO TRANSITION CABINET OR BUILDING. EXTEND CONDUIT 1' BEYOND TRANSFORMER PAD.
8. CONCRETE OR PIPE BARRIERS MAY BE REQUIRED FOR PROTECTION FROM TRAFFIC. BARRIERS WILL BE PROVIDED BY CUSTOMER AND INSTALLED BY CONTRACTER AS DIRECTED BY W.H.E.
9. CUSTOMER IS RESPONSIBLE FOR FORMAL ENGINEER APPROVAL (THIS IS A GUIDELINE ONLY.)

No.	Description	Engr	Appd	Date
1	Change #1 D to 54			5/28/15

THREE PHASE TRANSFORMER CONCRETE PAD GUIDELINE

Wright-Hennepin Cooperative Electric Association
A Touchstone Energy Cooperative

12.47/7.2 KV
OCTOBER 1, 2013

Engr. Tech: | Engr: | Approved: | Date: 10/28/13

UM1-6C

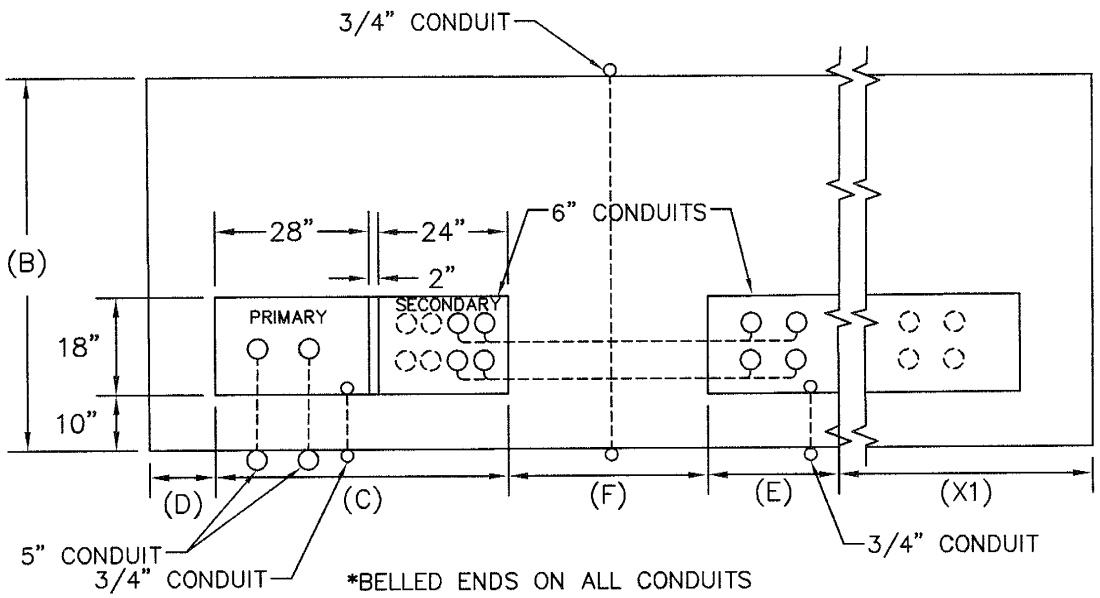

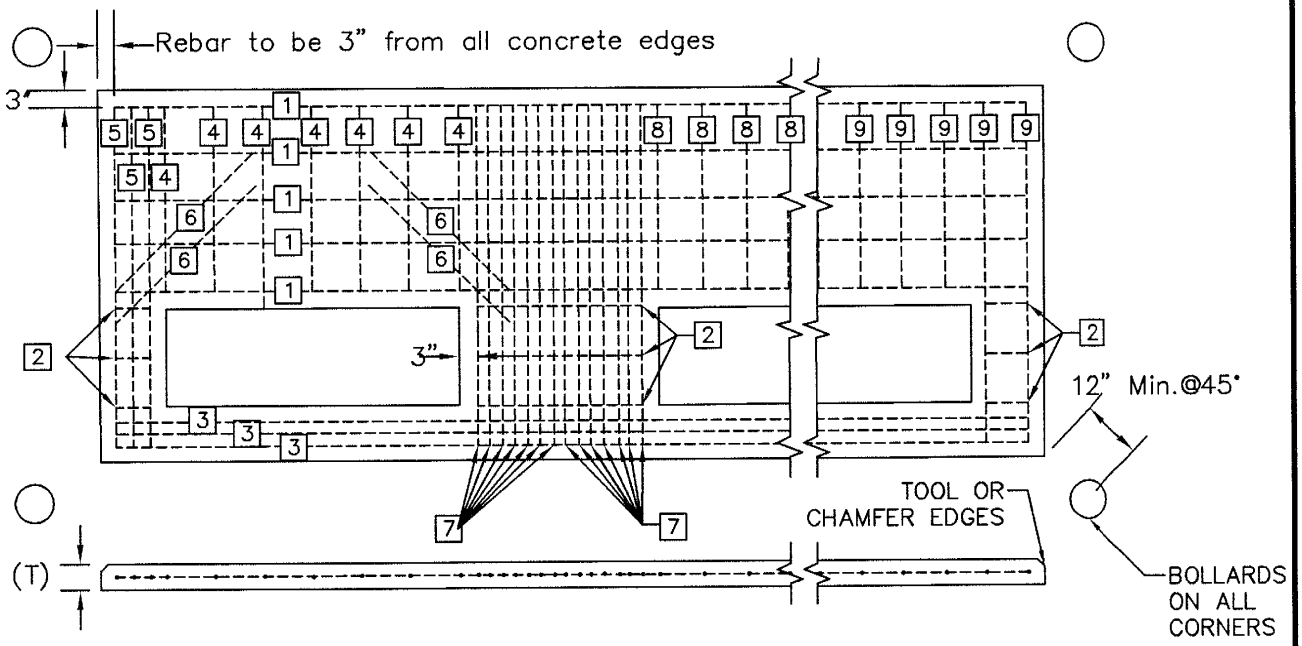

SIZE	B	C	D	E	F	T	X1	REINFORCED STEEL SCHEDULE 1	2	3	4	5	6	7	8	9
75-500 kVA	68"	54"	12"	18" Min	36"	6"	Bal of SCC width	5-#4	3-#4	3-#4	7-#4	3-#4	2-#4 X 3'0"	14-#4	4-#4	#4
750-2500 kVA	100"	54"	20"	18" Min	36"	8"	Bal of SCC width	9-#4	3-#4	3-#4	8-#4	6-#4	2-#4 x 3'-0"	14-#4	5-#4	#4

*SEE UM1–G1 & G2 FOR NOTES AND GROUNDING
**CUSTOMER IS RESPONSIBLE FOR FORMAL ENGINEERING APPROVAL ON ALL CONCRETE WORK. (THIS IS A GUIDELINE ONLY.)

(GUIDELINE ONLY)

THREE PHASE PAD–MOUNTED TRANSFORMER SECONDARY CONNECTION CABINET CONCRETE PAD – IN–LINE ORIENTATION

No.	Description	Engr	Appd	Date
2	Changed Dimensions			5/28/15
1	Changed Dimensions			7/14/14

Wright-Hennepin Cooperative Electric Association
A Touchstone Energy Cooperative

12.47/7.2 KV
OCTOBER 1, 2013

Eng. Tech.: Eng.: Approved: Date:

UM1–8C

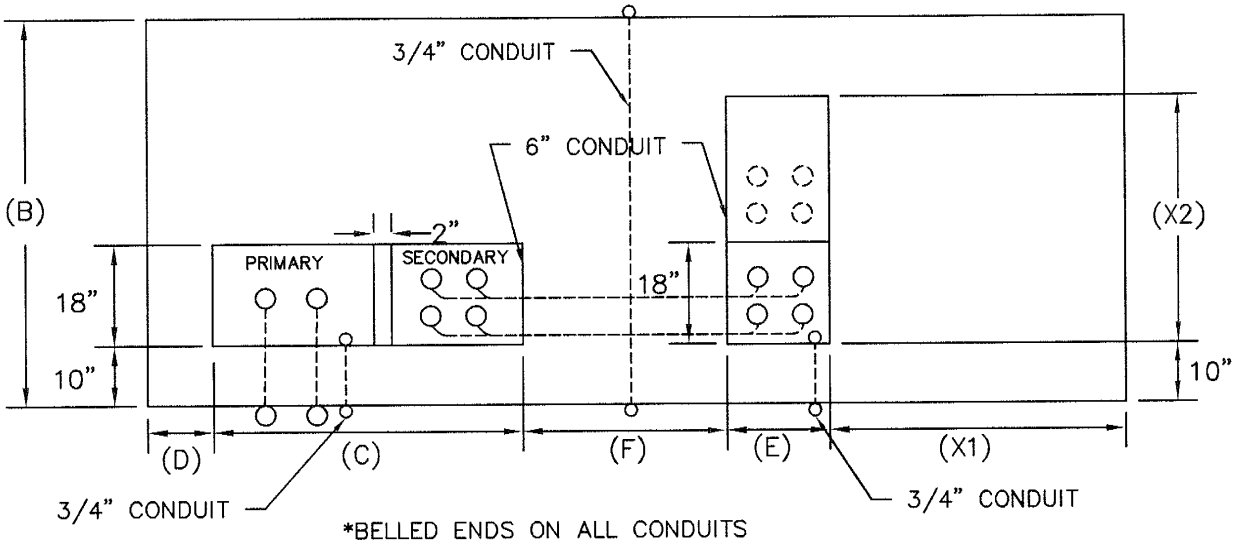

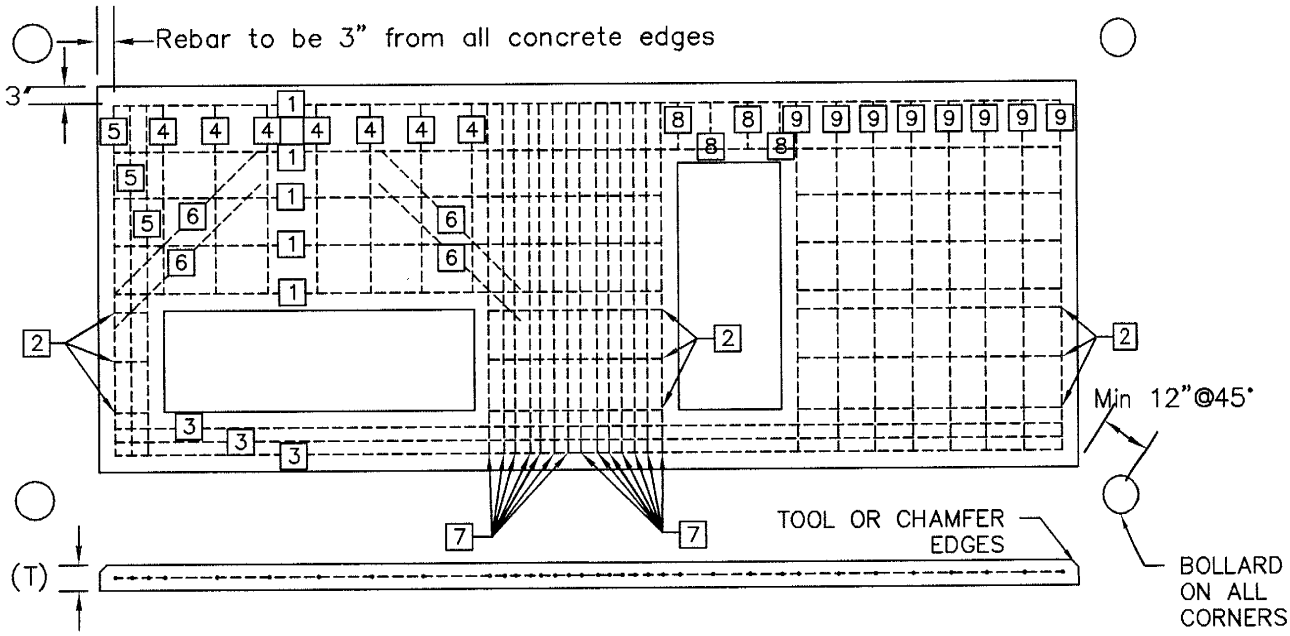

SIZE	PAD DIMENSIONS (DIM)								REINFORCED STEEL SCHEDULE								
	B	C	D	E	F	T	X1	X2	1	2	3	4	5	6	7	8	9
75-500 kVA	68"	54"	12"	18" Min	36"	6"	Bal of SCC depth	Bal of SCC width	5-#4	3-#4	3-#4	7-#4	3-#4	2-#4 X 3'0"	14-#4	4-#4	#4
750-2500 kVA	100"	54"	20"	18" Min	36"	8"	Bal of SCC depth	Bal of SCC width	9-#4	3-#4	3-#4	8-#4	6-#4	2-#4 x 3'-0"	14-#4	5-#4	#4

*SEE UM1–G1 & G2 FOR NOTES AND GROUNDING
**CUSTOMER IS RESPONSIBLE FOR FORMAL ENGINEERING APPROVAL ON ALL CONCRETE WORK. (THIS IS A GUIDELINE ONLY.)

(GUIDELINE ONLY)

THREE PHASE PAD–MOUNTED TRANSFORMER SECONDARY CONNECTION CABINET CONCRETE PAD – 90° ORIENTATION

No.	Description	Engr	Appd	Date
2	Changed Dimensions			5/26/15
1	Changed Dimensions	--	--	7/14/14

Wright-Hennepin Cooperative Electric Association
A Touchstone Energy Cooperative

12.47/7.2 KV
OCTOBER 1, 2013

UM1–9C

NOTES:

1. CONCRETE TESTING, 3000 POUNDS MIN. PER SQUARE INCH: 4% TO 8% ENTRAINED AIR, 3/4" MAXIMUM SIZE AGGREGATE.
2. REINFORCING STEEL, ATSM–A615 GRADE 60, PLACE APPROXIMATELY 6" O.C. EACH WAY AND SECURELY TIED TOGETHER.
3. MINIMUM CONCRETE COVER OVER REINFORCING STEEL 2 INCHES UNLESS NOTED.
4. WOOD FLOAT FINISH, LEAVING NOT DEPRESSIONS.
5. LOCATE CONDUITS FOR SECONDARY CABLES AS CLOSE TO RIGHT EDGE OF OPENING AS POSSIBLE.
6. EXTEND (2) – 5" CONDUITS ON THE PRIMARY SIDE 1" BEYOND TRANSFORMER PAD, PARKING LOT, ROADWAY AND CURBS.
7. 3/4" CONDUIT REQUIRED FOR CONNECTION CABINET GROUND. (4) – 6" CONDUIT FOR SECONDARY TO TRANSITION.
8. CONCRETE OR PIPE BARRIERS MAY BE REQUIRED FOR PROTECTION FROM TRAFFIC. BARRIERS WILL BE PROVIDED BY CUSTOMER AND INSTALLED BY CONTRACTOR AS DIRECTED BY W.H.E.
9. SOIL COMPACTION UNDER PAD (FOR BOTH POUR–IN–PLACE AND SEPARATE STANDARD PADS) TO BE AT 95% STANDARD PROCTOR. (CONTACT LOCAL AUTHORITY FOR TIGHTER REQUIREMENTS.)
10. MAXIMUM 2 ELBOWS (CONDUITS), FOR PRIMARY FEED AND SOURCE CIRCUITS, WILL BE 5" SCHEDULE 40 PVC, 90°, 36" RADIUS.
11. PRIMARY PVC ELBOW STUB–OUTS MUST BE A MINIMUM OF 12" OUT FROM THE PAD EDGE WHETHER FROM A FRONT OR SIDE TRENCH APPROACH FEEDING THE TRANSFORMER.
12. THE SCC WINDOW ENTRANCE SHALL BE MINIMUM OF 18" DEEP.
13. ALL CABLING AND CONDUIT SHALL BE FURNISHED AND INSTALLED PER THE NATIONAL ELECTRIC CODE (NEC).

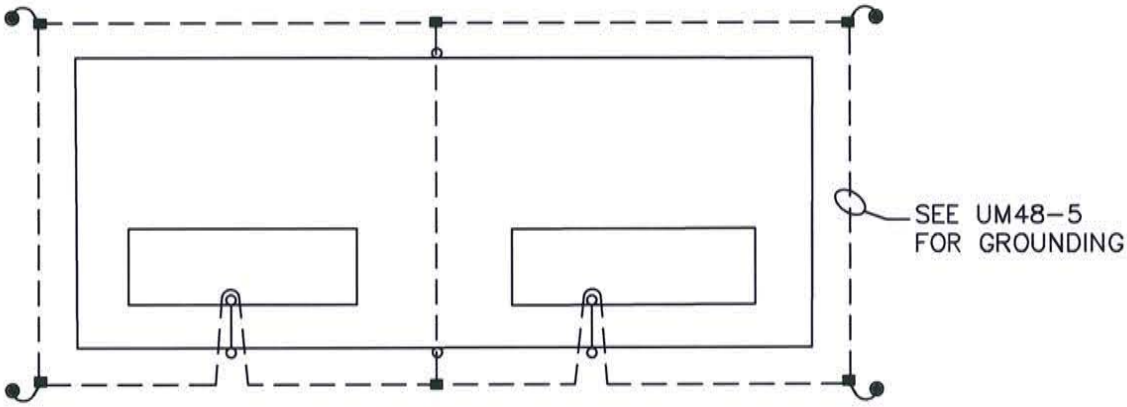

GROUNDING

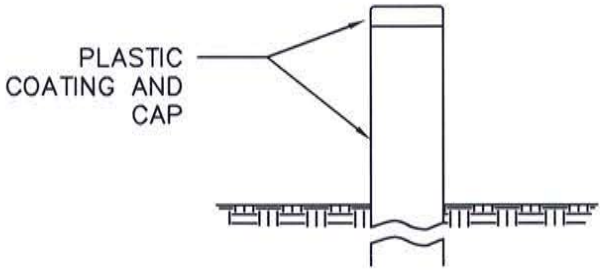

BOLLARD DETAIL

No.	Description	Engr	Appd	Date

THREE PHASE TRANSFORMER GUIDE

Wright-Hennepin Cooperative Electric Association
A Touchstone Energy Cooperative

12.47/7.2 KV
OCTOBER 1, 2013

Engr Tech: Engr: Approved: Date: 10/28/13

UM1–G1

SERVICE LATERAL SIZES

PADMOUNTED TRANSFORMERS		
KVA	Copper	Aluminum
208 Grd Y/120 Volt		
300	3 - 500	2 - 750
500	4 - 500	4 - 750
750	6 - 500	6 - 750
* 1000	8 - 500	8 - 750
240/120 Volt Δ (1)		
300	2 - 500	2 - 750
500	4 - 500	3 - 750
750	6 - 500	6 - 750
* 1000	7 -500	7 - 750
480 Grd Y/277 Volt		
300	1 - 500	1 - 750
500	2 - 500	2 - 750
750	3 - 500	3 - 750
1000	4 - 500	4 - 750
1500	6 - 500	6 - 750
* 2000	7 - 500	7 - 750
*2500	9-500	9-750
240/120 Volt 1 ∅		
167	2 - 500	2 - 500

1 * Need extension and support on secondary bushings of transformer and all transition cabinet. (For all connections over six (6) holes.)
**All secondary wiring shall be reated at 90° C, rating per 2014 NEC Code, Table 310.15.
NOTE: 80% derate applied to cables in conduit.

TRANSFORMER CONNECTION INFORMATION

CUSTOMER WIRING COLORS

The NEC specifies that the grounded (neutral) conductor be white or natural gray. The phase wires are not required by the NEC to be a specified color with the exception of the phase conductor with the higher voltage to ground in a 4–wire delta–connected secondary (wild leg) which shall be orange. Color coding guidelines shown below are consistent with common industry practice and should be used.

Color Coding (reading L to R as you stand facing the equipment)

Secondary Voltage	N	X1	X2	X3
480 V WYE	White	Brown	Orange	Yellow
208 V WYE	White	Black	Red	Blue
240 V DELTA		Black	Black	Orange (wild leg)

NOTES:
1. Ground conductors must be green.
2. Phase rotation – ABC clockwise rotation (ABC DOES NOT have to be indicated).
3. DO NOT USE red/white/blue to identify phase wires.
4. Any color code used on customer wires shall be verified before making a connection.

CUSTOMER METER CONNECTIONS – (Refer to Meter Standards)
Wild leg is attached to the lug farthest to the right.

CUSTOMER–OWNED SERVICE CONNECTION CABINET
Preferred bus phase connection sequence: top–phase A, upper middle–phase B, lower 1 middle–phase C, bottom–neutral.

No.	Description	Engr	Appd	Date
1	Upd. chart, add & upd. notes			5/22/15

THREE PHASE TRANSFORMER WIRING GUIDE

Wright-Hennepin Cooperative Electric Association
A Touchstone Energy Cooperative

12.47/7.2 KV
MAY 2015

Engr Tech: | Engr: | Approved: | Date:

UM1–G2

1. NONCOMBUSTIBLE WALLS (included in this class would be wood framed brick veneered buildings, metal clad steel framed buildings, asbestos-cement-board walled metal framed buildings and masonary buildings with a one hour fire rating).
Oil insulated, pad-mounted transformers may be located a minimum distance of 10' from walls if all the following clearances are maintained from doors, windows, and other building openings. A sump shall be installed for transformers if the immediate terrain is not pitched away from the building. Contact Electric Standards for sump specifications. If a combustible first floor overhang exists, a 10' distance from the edge of the transformer to the edge of the overhang (combination of vertical and horizontal distance) shall be required in addition to the other clearances shown.

A. DOORS
Oil insulated,pad-mounted transformers shall not be located within a zone extending 20' outward and 10' to either side of a building door.

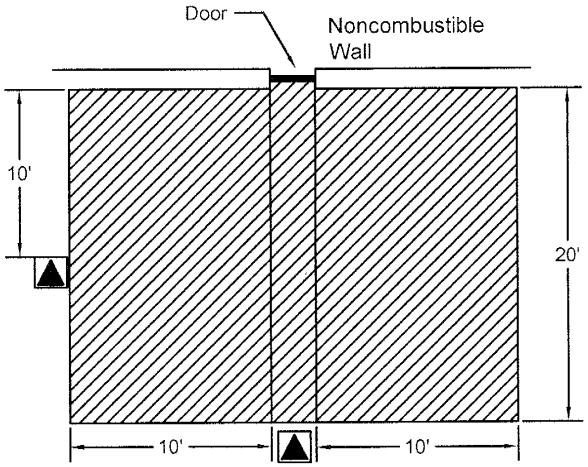

B. AIR INTAKE OPENINGS
Oil insulated,pad-mounted transformers shall not be located within a zone extending 10' outward and 10' to either side of an air intake opening located within 10' of the ground. If the air intake opening is located more than 10' above ground, the distance from the transformer to the opening shall be a minimum of 25'.

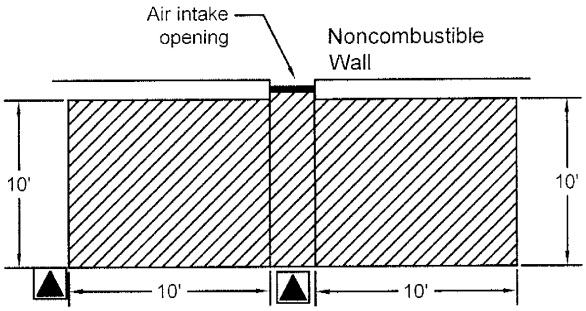

No.	Description	Engr	Appd	Date

PAD–MOUNT TRANSFORMER CLEARANCE GUIDE

Wright-Hennepin Cooperative Electric Association
A Touchstone Energy Cooperative

12.47/7.2 KV
MAY 2015

Engr. Tech: Engr: Approved: Date: 5/28/15

UM1–G3A

CLEARANCE REQUIREMENTS FOR PAD-MOUNTED TRANSFORMERS

C. WINDOWS OR OPENINGS OTHER THAN AIR INTAKE OR DOOR

1. FIRST STORY
   Oil insulated, pad-mounted transformers shall not be located within a zone extending 10' outward and 3' to either side of a building window or opening other than an air intake or door.

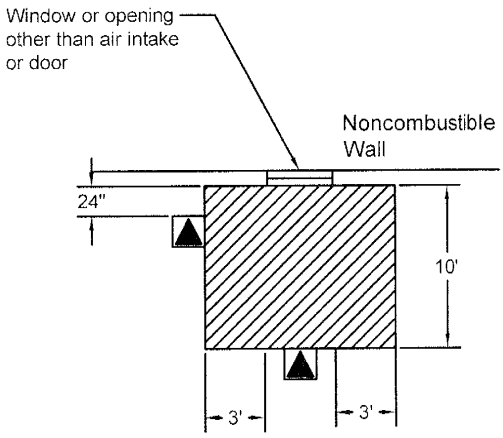

2. SECOND STORY
   Oil insulated, pad-mounted transformers shall not be located less than 5' from any part of a second story window or opening other than an air intake. Oil fill equipment shall not be placed below an operating window. No exceptions will be made.

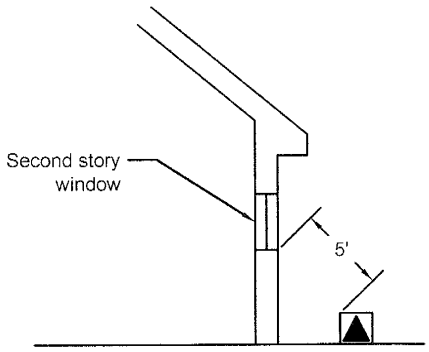

No.	Description	Engr	Appd	Date

PAD–MOUNT TRANSFORMER CLEARANCE GUIDE

Wright-Hennepin Cooperative Electric Association
A Touchstone Energy Cooperative

12.47/7.2 KV
MAY 2015

Engr-Tech: Engr: Approved: Date: 5/28/15

UM1–G3B

CLEARANCE REQUIREMENTS FOR PAD-MOUNTED TRANSFORMERS

II. COMBUSTIBLE WALLS

(Included in this class are wood buildings and metal clad buildings with wood frame construction.) Oil insulated, pad-mounted transformers shall be located a minimum of 10' from the building wall in addition to the clearance from building doors, windows and other openings set forth for noncombustible walls. A sump shall be installed for transformers if the immediate terrain is not pitched away from the building. Contact Engineer for sump specifications. If a combustible first floor overhang exits, a 10' distance from the edge of the transformer to the edge of the overhang (combination of vertical and horizontal distance) shall be required in addition to the other clearances as shown.

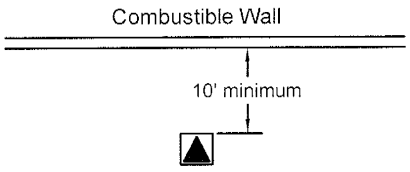

III. BARRIERS

(Included in this class are reinforced concrete, brick or concrete block barrier walls with a 3 hour fire rating.) If the clearance specified above cannot be attained, a fire resistant barrier shall be constructed in lieu of the separation. The barrier (when required) is provided by the customer.

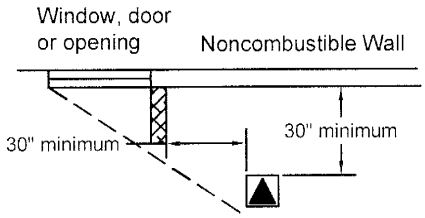

A. NONCOMBUSTIBLE WALLS

The barrier shall extend to a projection line from the corner of the pad-mounted to the furthest corner of the window, door or opening in question.

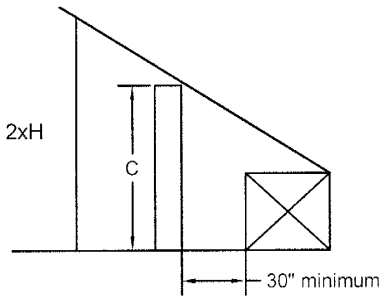

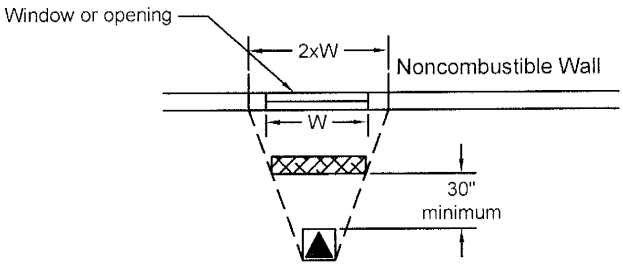

No.	Description	Engr	Appd	Date

PAD–MOUNT TRANSFORMER
CLEARANCE GUIDE

Wright-Hennepin Cooperative Electric Association
A Touchstone Energy Cooperative

12.47/7.2 KV
MAY 2015

Engr. Tech: Engr: Approved: Date: 5/28/15

UM1–G3C

CLEARANCE REQUIREMENTS FOR PAD-MOUNTED TRANSFORMERS

B. COMBUSTIBLE WALLS

The barrier shall extend 3' beyond the oil insulated, pad-mounted transformer. The height of the barrier shall be 3' above the top of the pad-mount transformer. If a combustible first floor overhang exists, the 24" specified shall be measured from the edge of the overhang rather than from the building wall.

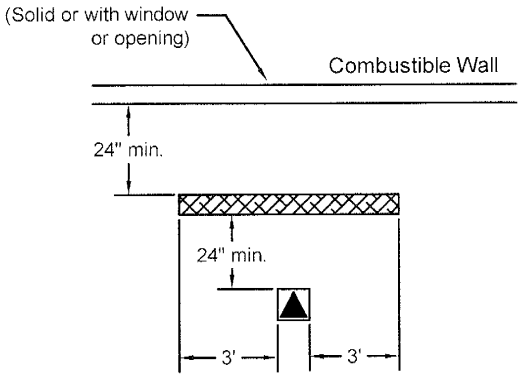

IV. FIRE ESCAPES

Oil insulated, pad-mounted transformers shall be located such that a minimum clearance of 20' is maintained from fire escape at all times.

Exception: Oil insulated, pad-mounted transformers may be located closer to a fire escape then the 20' minimum when a fire resistant barrier is constructed around the transformer (side walls and roof). The barrier shall extend a minimum of 1' beyond the transformer. The transformer and barrier shall not in any way obstruct the fire escape exit. 10' clearance is required in front of pad-mount transformer doors. Adequate transformer accessibility and ventilation shall be provided. It transformer is installed underneath a fire escape, maintain 10' vertical clearance.

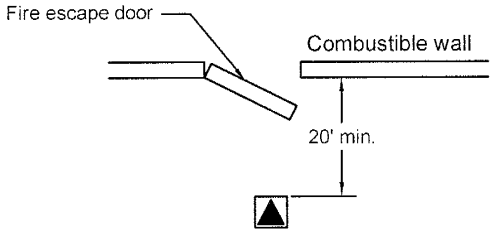

V. DECORATIVE COMBUSTIBLE ENCLOSURE

Decorative combustible enclosures (fence) installed by the customer around oil insulated, pad-mounted transformers adjacent to a combustible building wall shall not extend more than 24" beyond the transformer towards the combustible wall. 10' clearance required in front of pad-mounted transformer doors. Adequate transformer accessibility and ventilation shall be provided.

VI. NONCOMBUSTIBLE AND COMBUSTIBLE WALLS - FIRE RESISTANT BARRIERS

The examples of combustible and noncombustible walls and fire resistant barriers obtained from March & McLennan Inc., Protection Consultants, and apply to building exposure to a fire located outside of the building.

No.	Description	Engr	Appd	Date

PAD–MOUNT TRANSFORMER CLEARANCE GUIDE

Wright-Hennepin Cooperative Electric Association
A Touchstone Energy® Cooperative

12.47/7.2 KV
MAY 2015

Engr. Tech: | Engr: | Approved: | Date: 5/25/15

UM1–G3D

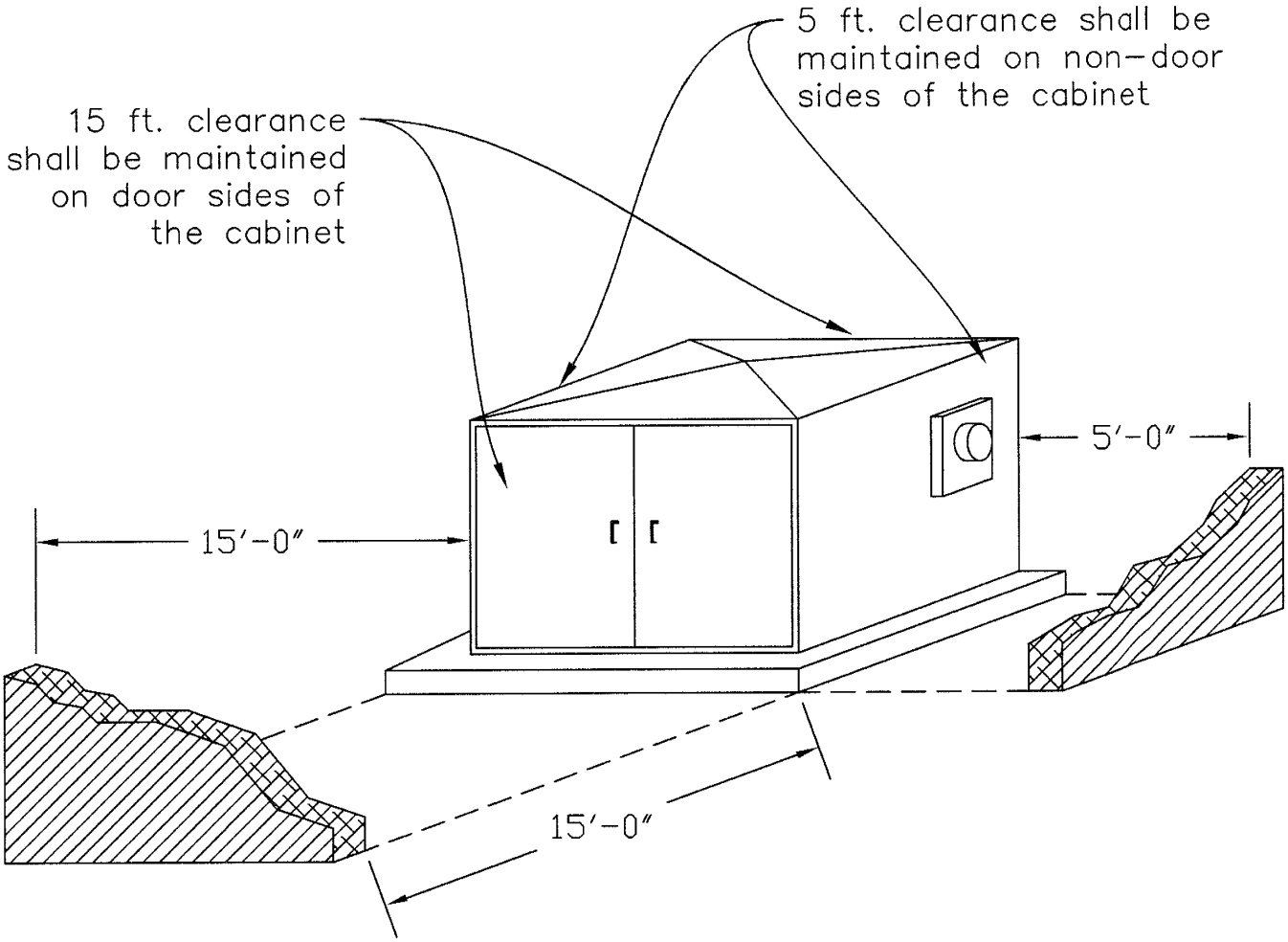

No.	Description	Engr	Appd	Date

PRIMARY METER CABINET CLEARANCE REQUIREMENTS

Wright-Hennepin Cooperative Electric Association
A Touchstone Energy® Cooperative

12.47/7.2 KV
MAY 2015

Engr-Tech: Engr: Approved: Date: 5/27/15

UM1-G4

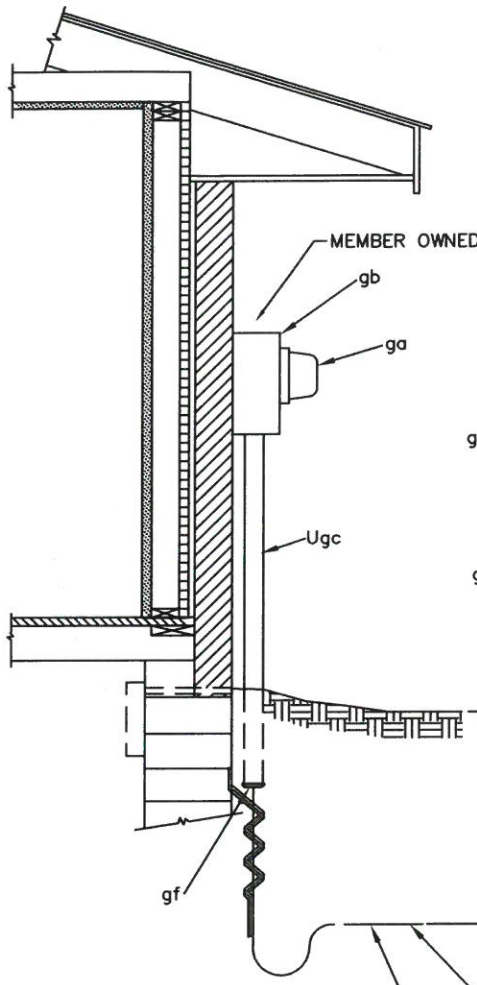

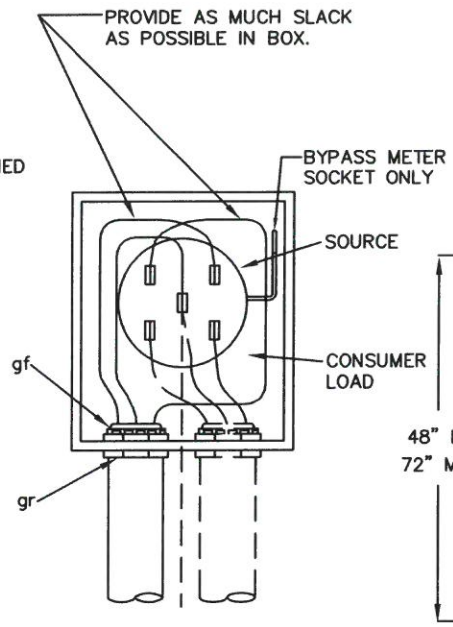

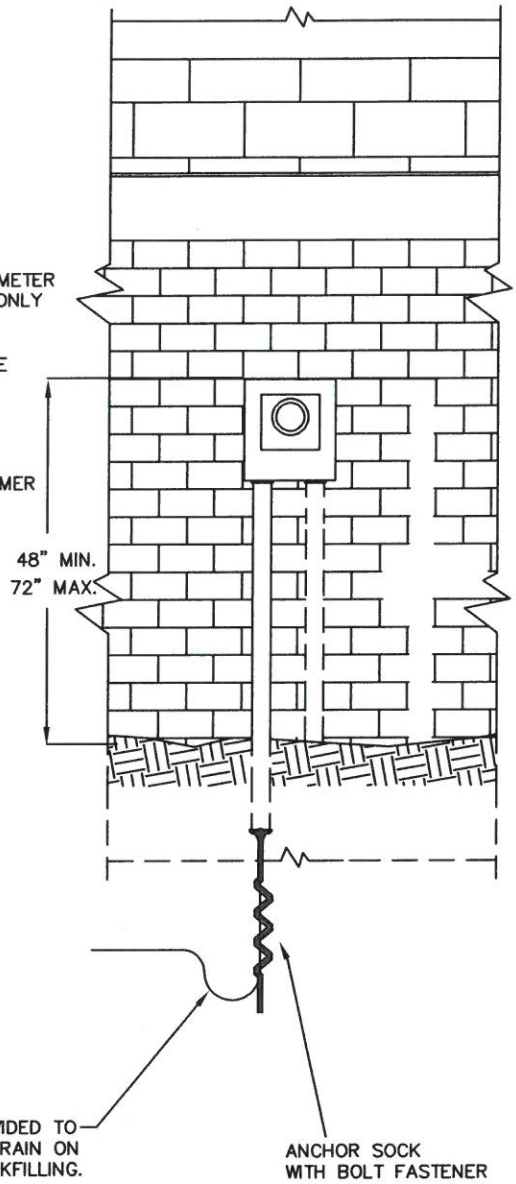

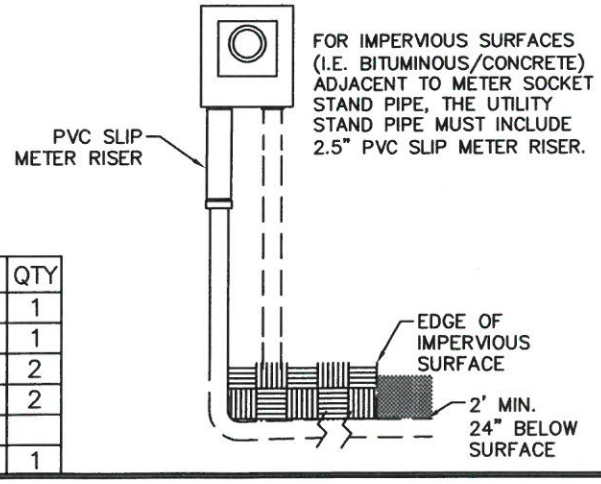

STOCK NO	ITEM	MATERIAL	QTY
	ga	Meter, as required	1
	gb	Meter socket	1
	gf	Insulated bushing, size as req'd	2
	gr	Conduit locknuts, size as req'd	2
	Ugc	Conduit, diameter and length as req'd	1

METER INSTALLATION UNDERGROUND SOURCE GUIDE

No.	Description	Engr	Appd	Date
2	Added PVC Slip Riser	BDT		5/30/14
1	Added By-Pass Meter			7/14/14

Wright-Hennepin Cooperative Electric Association
A Touchstone Energy Cooperative

12.47/7.2 KV
OCTOBER 1, 2013

Engr. Tech.: Eva | Engr.: | Approved: | Date: 10/22/13

UM8
(UK8)

TEMPORARY UNDERGROUND SERVICE GUIDE

The installation shall be outside utility easement and shall be not less than 6 feet from the service pedestal or pad-mount transformer and not less than 10' from WH-owned pole.

Temporary service installations subject to cold sequence requirements.

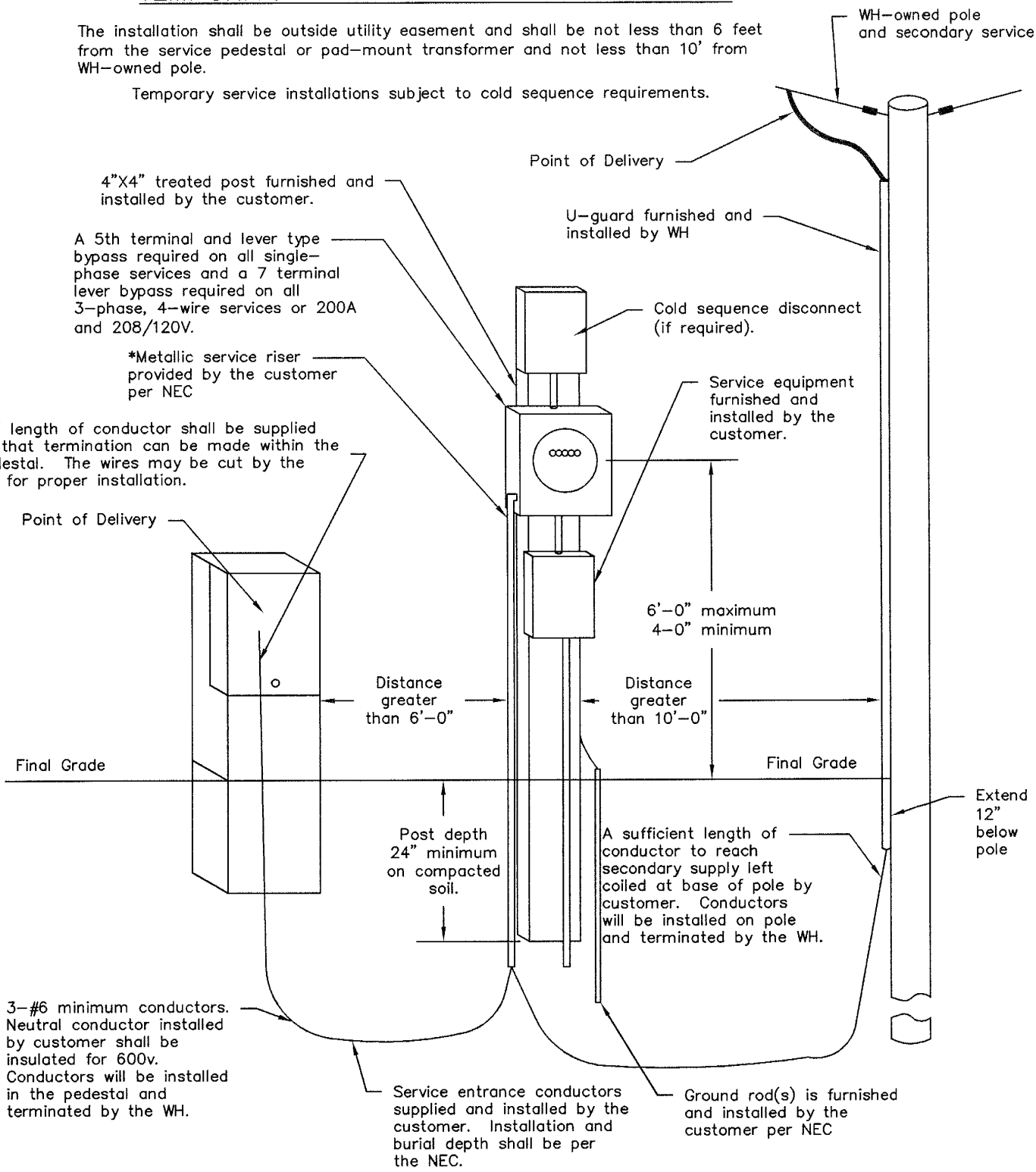

*A CT connection cabinet is required on all 3-phase connection greater than 208V or 200A and all single-phased connection cabinets greater than 320A.
*Member shall be aware that an electrical inspection may occur at anytime and all wiring shall be completed to all applicable codes.
*Service address shall be prominently displayed on the temporary service installation.

No.	Description	Engr	Appd	Date

TEMPORARY SERVICE INSTALLATION GUIDE FROM AN UNDERGROUND SECONDARY SUPPLY

Wright-Hennepin Cooperative Electric Association
A Touchstone Energy Cooperative

12.47/7.2 KV
MAY 2015

Engr Tech: Engr: Approved: Date: 5/28/15

UM8-G1

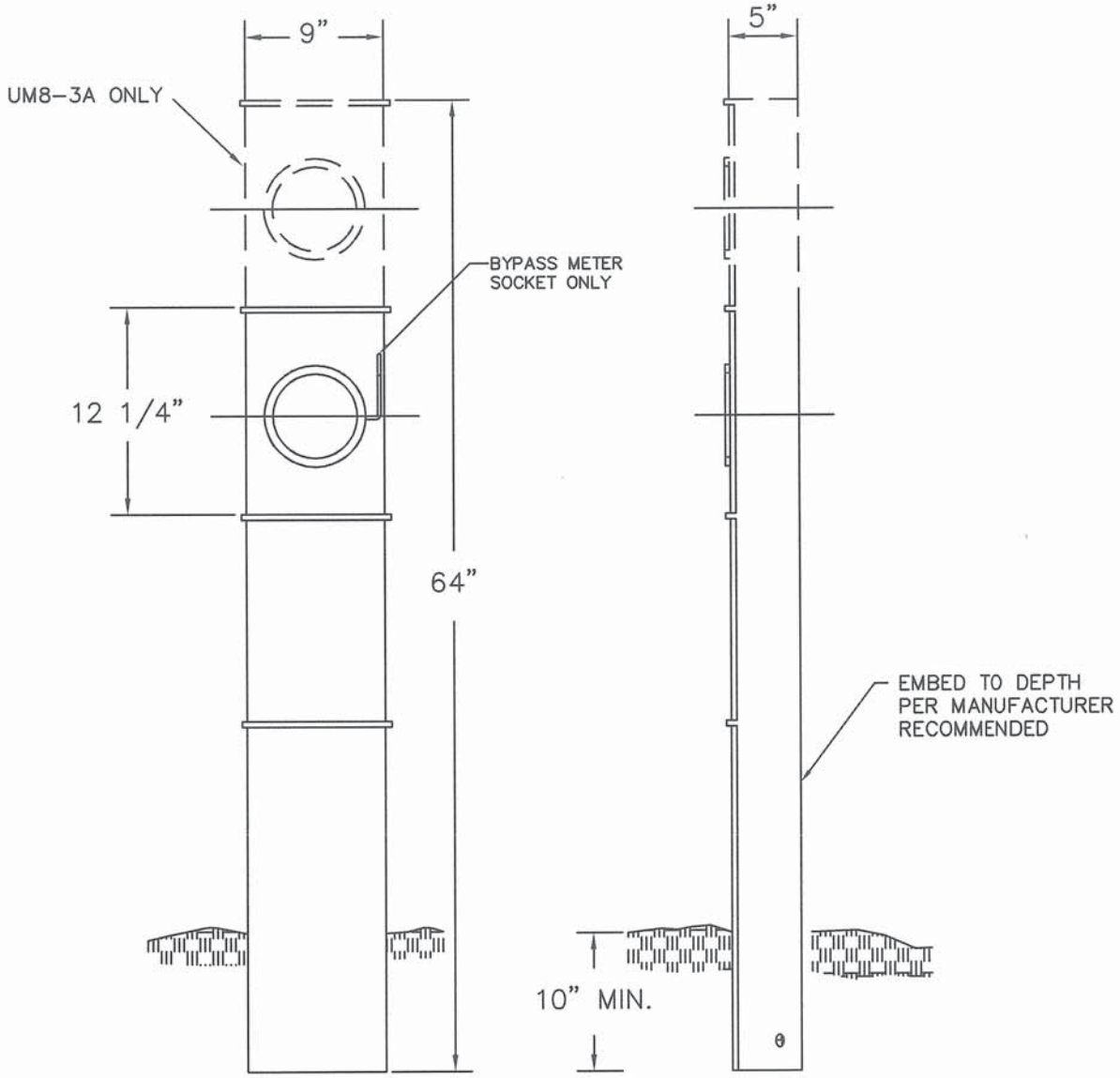

"MEMBER OWNED"

STOCK NO	ITEM	MATERIAL	QTY
39900001		Meter, pedestal, 200 A Main,	1
		200 Amp per position (UM8-3)	
		Meter, pedestal, 400 A. Main,	1
		200 Amp per position (UM8-3A)	

TROUGH TYPE
METER PEDESTAL GUIDE

No.	Description	Engr	Appd	Date
1	Added By-Pass Meter			7/14/14

Wright-Hennepin Cooperative Electric Association
A Touchstone Energy Cooperative

12.47/7.2 KV
OCTOBER 1, 2013

Engr. Tech.: Engr.: Approved: Date: 10/22/13

UM8-3
UM8-3A

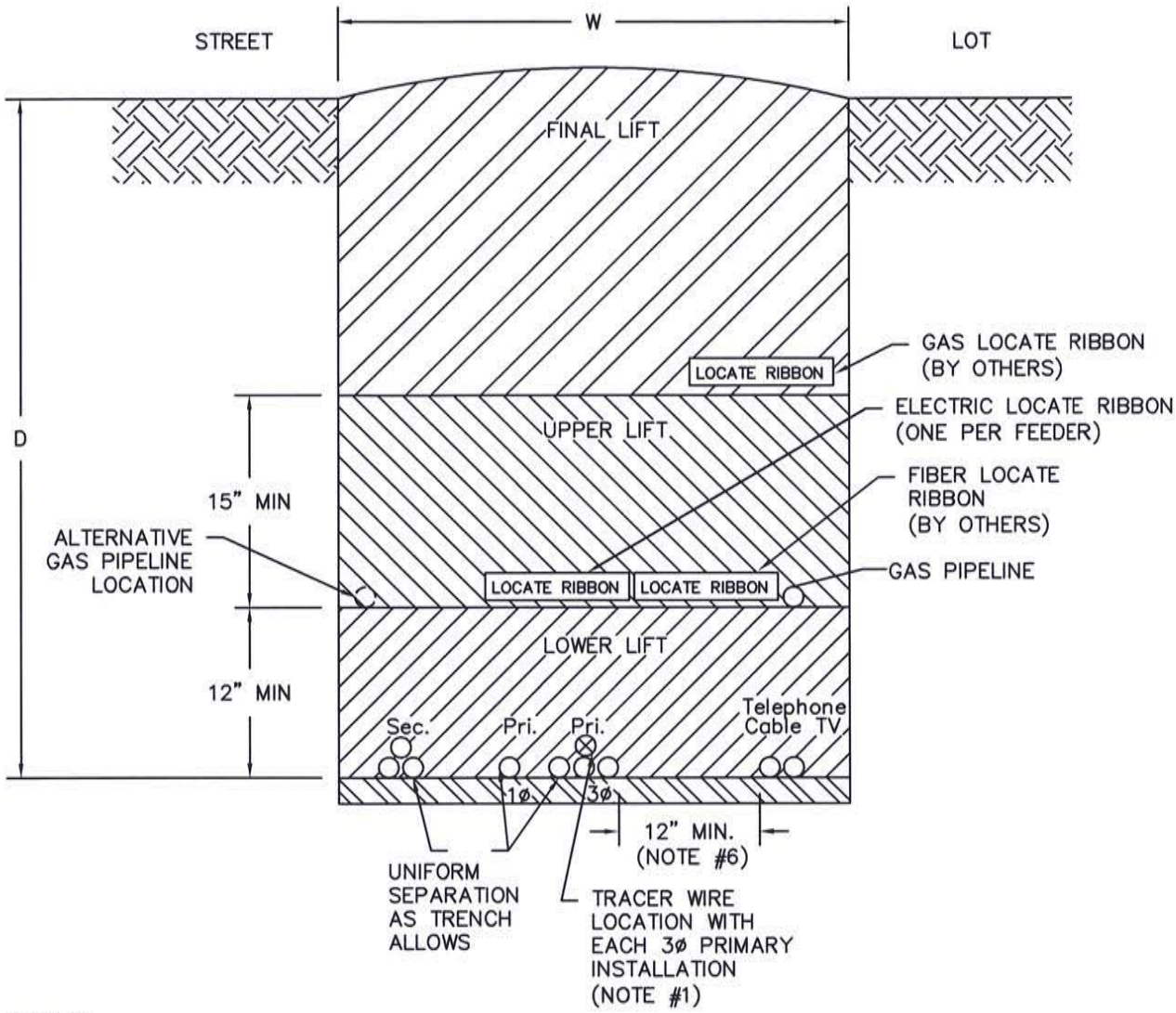

LEGEND

- FINAL LIFT, COMPACTED BACKFILL
- UPPER LIFT, COMPACTED BACKFILL
- LOWER LIFT, COMPACTED BACKFILL
- UNDISTURBED EARTH
- ⊗ TRACER WIRE #12 STEEL REINFORCED COPPER COATED
- BEDDING SAND/CLEAN FILL

PRI. = PRIMARY SUPPLY CABLES
SEC. = SECONDARY OR STREETLIGHT WIRES

D = NORMAL TRENCH 42" – 48" DEPTH
W = 24" – 36" NORMAL

NOTES:

1. TRACER WIRES SHALL BE PROVIDED FOR ALL 3ø FEEDERS, AND 3ø EXPRESS SERVICE. (ON A PER FEEDER/PER SERVICE BASIS.)
2. DEPTHS SPECIFIED ARE TO FINISHED GRADE.
3. SAND BEDDING WILL BE SPECIFIED AS NEEDED BY WH FOREMAN.
4. BACKFILLING IS PART OF ALL TRENCHING UNITS INCLUDING JOINT–USE TRENCHES. ALL JOINT TRENCH BACKFILL SHALL BE PROPERLY COMPACTED. (PER LOCAL GOVERNING AUTHORITY REQUIREMENTS.)
5. ALL SPLICE POINTS FOR PRIMARY CONDUCTORS SHALL BE MARKED PER WH'S REQUIREMENTS. (WITH WH LOCATE DISK.)
6. FOR EASE OF CONSTRUCTION AND MAINTENANCE, PRIMARY CABLE SHOULD BE 12–24" FROM COMMUNICATION CABLES. HOWEVER NESC PERMITS "SUPPLY AND COMMUNICATION CABLES TO BE BURIED TOGETHER AT THE SAME DEPTH WITH NO DELIBERATE SEPARATION BETWEEN FACILITIES, PROVIDED ALL PARTIES ARE IN AGREEMENT."
7. ONLY SINGLE PHASE SUPPLY CABLES MAY BE BURIED AT THE SAME DEPTH WITH COMMUNICATION CABLES WITH NO DELIBERATE SEPARATION. THREE PHASE CABLES MUST BE SEPARATED FROM COMMUNICATION CABLES BY A MINIMUM OF 1 FOOT (REFERENCE LATEST NESC REQUIREMENTS).
8. IN PARALLEL TRENCH CONSTRUCTION, STEEL GAS PIPE MUST BE A MINIMUM OF 24" FROM ANY ELECTRIC OR COMMUNICATION LINES.

No.	Description	Engr	Appd	Date

TRENCHES FOR DIRECT BURIAL CABLE

Wright-Hennepin Cooperative Electric Association
A Touchstone Energy Cooperative

12.47/7.2 KV
OCTOBER 1, 2013

Engr. Tech: Engr: Approved: Date: 10/28/13

UR2–NT

WALL ELEVATION

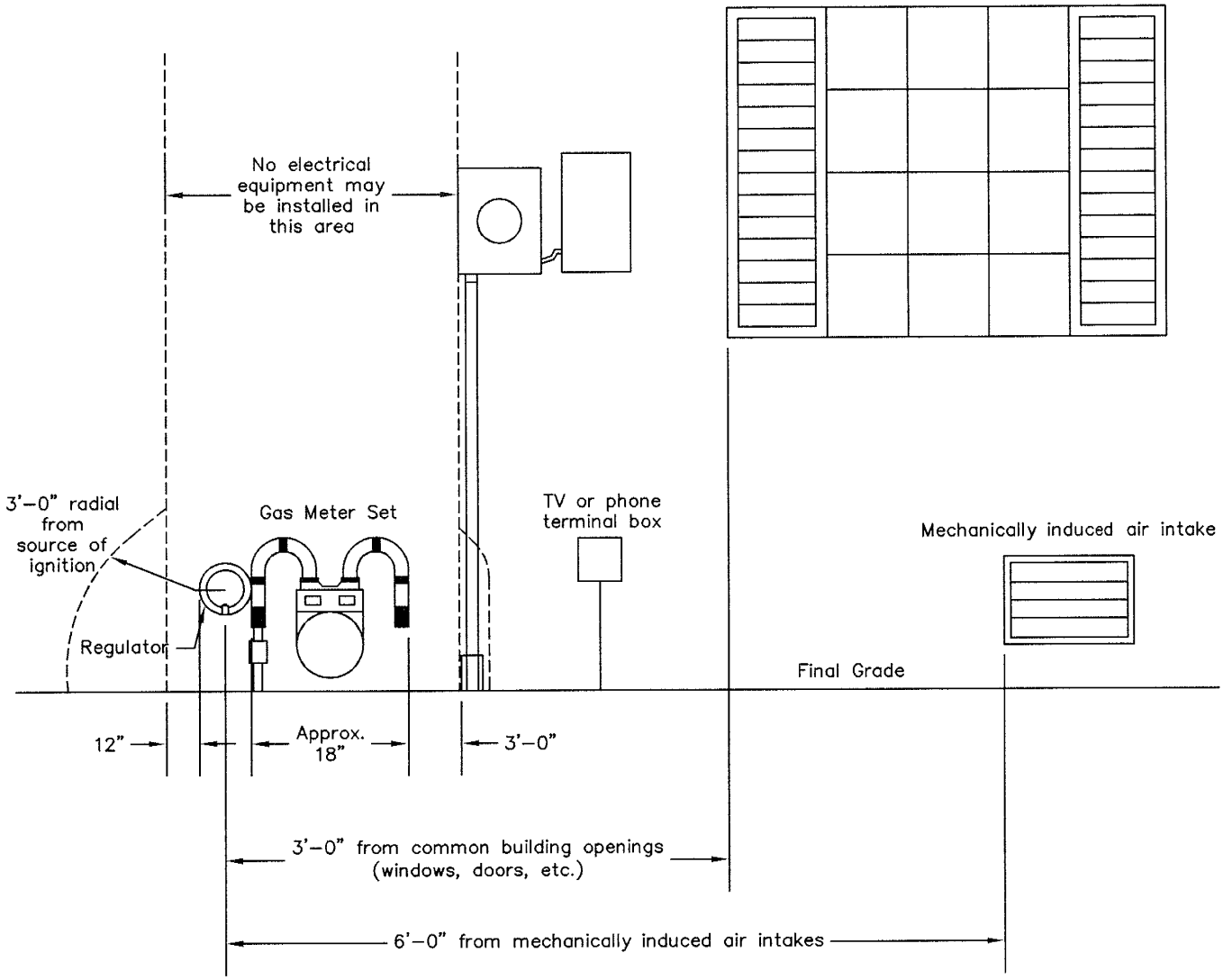

Note: 3'–0" minimum working clearances from non–electrical obstructions is preferred around gas meter set.

–Clearances required in specific cases may be obtained from WH.
–Meters are to be located on the front one third of the house.

No.	Description	Engr	Appd	Date

CLEARANCE REQUIREMENTS FROM GAS METER

Wright-Hennepin Cooperative Electric Association
A Touchstone Energy® Cooperative

12.47/7.2 KV
MAY 2015

Engr. Tech: | Engr: | Approved: | Date: 5/28/15

UM1–G5